Effective Date: May 14, 2013
Revision B

GSFC JPSS CMO
May 21, 2013
Released

Joint Polar Satellite System (JPSS) Ground Project
Code 474
474-00075

Joint Polar Satellite System (JPSS) Operational Algorithm Description (OAD) Document for Gridding/Granulation (G/G) and VIIRS Gridded Intermediate Products (GIP) Software

For Public Release

The information provided herein does not contain technical data as defined in the International Traffic in Arms Regulations (ITAR) 22 CFC 120.10. This document has been approved For Public Release to the NOAA Comprehensive Large Array-data Stewardship System (CLASS).

Goddard Space Flight Center
Greenbelt, Maryland

National Aeronautics and
Space Administration

Check the JPSS MIS Server at https://jpssmis.gsfc.nasa.gov/frontmenu_dsp.cfm to verify that this is the correct version prior to use.

Joint Polar Satellite System (JPSS) Operational Algorithm Description (OAD) Document for Gridding/Granulation (G/G) and VIIRS Gridded Intermediate Products (GIP) Software JPSS Electronic Signature Page

Prepared By:

Neal Baker
JPSS Data Products and Algorithms, Senior Engineering Advisor
(Electronic Approvals available online at (https://jpssmis.gsfc.nasa.gov/mainmenu_dsp.cfm)

Approved By:

Heather Kilcoyne
DPA Manager
(Electronic Approvals available online at (https://jpssmis.gsfc.nasa.gov/mainmenu_dsp.cfm)

Goddard Space Flight Center
Greenbelt, Maryland

Preface

This document is under JPSS Ground Algorithm ERB configuration control. Once this document is approved, JPSS approved changes are handled in accordance with Class I and Class II change control requirements as described in the JPSS Configuration Management Procedures, and changes to this document shall be made by complete revision.

Any questions should be addressed to:

JPSS Configuration Management Office
NASA/GSFC
Code 474
Greenbelt, MD 20771

Change History Log

Revision	Effective Date	Description of Changes (Reference the CCR & CCB/ERB Approve Date)
Original	06/03/2011	This version incorporates **474-CCR-11-0091** which converts D39303, Operational Algorithm Description (OAD) Document for Gridding/Granulation (G/G) and VIIRS Gridded Intermediate Products (GIP), Rev C, dated 03/17/2010 to a JPSS document, Rev -. This was approved by the JPSS Ground Algorithm ERB on June 3, 2011.
Revision A	01/18/2012	**474-CCR-11-0274:** This version baselines 474-00075, Joint Polar Satellite System (JPSS) Operational Algorithm Description (OAD) Document for Gridding/Granulation (G/G) and VIIRS Gridded Intermediate Products (GIP) Software, for the Mx 6 IDPS release. This CCR was approved by the JPSS Algorithm ERB on January 18, 2012.
Revision B	05/14/2013	**474-CCR-13-0948:** This version authorizes 474-00075 JPSS OAD Document for G/G and VIIRS GIP Software, for the Mx 7.0 IDPS release. Includes **ECR-ALG-0037** which contains Raytheon PCR031571; OAD: Implement 474-CCR-12-0480 (Increase SZA Threshold in VIIRS-SCD-SNOW-COVER-QUAL-LUT from 60 to 85 degrees) (ADR 4787) on Tables 13 & 47. Includes Raytheon PCR032720; 474-CCR-13-0916/ECR-ALG-0037: Update applicable OAD filenames/template/Rev/etc. for Mx7 Release.

NATIONAL POLAR-ORBITING OPERATIONAL ENVIRONMENTAL SATELLITE SYSTEM (NPOESS)

OPERATIONAL ALGORITHM DESCRIPTION DOCUMENT FOR GRIDDING - GRANULATION (G - G) AND VIIRS GRIDDED INTERMEDIATE PRODUCTS (GIP)

SDRL No. S141
SYSTEM SPECIFICATION SS22-0096

RAYTHEON COMPANY
INTELLIGENCE AND INFORMATION SYSTEMS (IIS)
NPOESS PROGRAM
OMAHA, NEBRASKA

Copyright © 2004-2011
Raytheon Company
Unpublished Work
ALL RIGHTS RESERVED

Portions of this work are the copyrighted work of Raytheon. However, other entities may own copyrights in this work. Therefore, the recipient should not imply that Raytheon is the only copyright owner in this work.

This data was developed pursuant to Contract Number F04701-02-C-0502 with the US Government under subcontract number 7600002744. The US Government's right in and to this copyrighted data are as specified in DFAR 252.227-7013, which was made part of the above contract.

.

IAW DFAR 252.227-7036, Raytheon hereby declares that, to the best of its knowledge and belief, the technical data delivered under Subcontract No. 7600002744 is complete, accurate, and complies with all requirements of the Subcontract.

TITLE: NATIONAL POLAR-ORBITING OPERATIONAL ENVIRONMENTAL SATELLITE SYSTEM (NPOESS) OPERATIONAL ALGORITHM DESCRIPTION DOCUMENT FOR GRIDDING - GRANULATION (G - G) AND VIIRS GRIDDED INTERMEDIATE PRODUCTS (GIP)

APPROVAL SIGNATURES:

_____

Stephen E. Ellefson Date
ING/PRO Lead

_____

Gabriela A. Ostler Date
Mission Assurance and Enterprise Effectiveness (MAEE)

Northrop Grumman Space & Mission Systems Corp.
Space Technology
One Space Park
Redondo Beach, CA 90278

Engineering & Manufacturing Development (EMD) Phase
Acquisition & Operations Contract

CAGE NO. 11982

Operational Algorithm Description Document for Gridding - Granulation (G - G) and VIIRS Gridded Intermediate Products (GIP)

Document Number: D39303
Document Date: Sep 29, 2011 **Revision: D5**

PREPARED BY:

Dr. Alain Sei *Date*
AM&S VIIRS Land EDR Lead

Paul D. Siebels *Date*
IDPS PRO SW Manager

ELECTRONIC APPROVAL SIGNATURES:

Roy Tsugawa *Date*
A&DP Lead & ACCB Chair

Stephen E. Ellefson *Date*
IDPS Processing SI Lead

Bob Hughes *Date*
A&DP Deputy & ARB Chair

Prepared by
Northrop Grumman Space & Mission Systems Corp.
Space Technology
One Space Park
Redondo Beach, CA 90278

Prepared for
Department of the Air Force
NPOESS Integrated Program Office
C/O SMC/CIK
2420 Vela Way, Suite 1467-A8
Los Angeles AFB, CA 90245-4659

Under
Contract No. F04701-02-C-0502
This document has been identified per the NPOESS Common Data Format Control Book – External Volume 5 Metadata, D34862-05, Appendix B as a document to be provided to the NOAA Comprehensive Large Array-data Stewardship System (CLASS) via the delivery of NPOESS Document Release Packages to CLASS.

Check the JPSS MIS Server at https://jpssmis.gsfc.nasa.gov/frontmenu_dsp.cfm to verify that this is the correct version prior to use

Northrop Grumman Space & Mission Systems Corp.
Space Technology
One Space Park
Redondo Beach, CA 90278

Revision/Change Record

Document Number **D39303**

Revision	Document Date	Revision/Change Description	Pages Affected
---	9-17-04	Initial Release.	All
A1	7-22-05	Reflects Science To Operational Code Conversion.	All
A2	7-3-07	24Mar06 – Updated the new G/G OAD template for basic format of Headings, Table of Contents, List of Figures, List of Tables, etc. 10Apr06 – Worked off OAD comments from I-P-O DDPR held 31Mar06. Renumbered all Figures from 2 digits to three digits then updated List of Figures. Updated Table of Contents, List of Tables, and List of Equations to correct page numbers. Changed font style and size within all tables to Arial, 10 pt. Updated TBD/TBR table. Did cleanup spacing/format edits. 18Apr06 – Updated Table 5. GridToGran Consumers to reflect updated Build 1.4 Wiring Diagram. 05May06 – Updated Interrelationships Diagrams. 16May06 – Updated TBRs. 09Aug06 – Added more description to the general approach to GranToGrid software. Filled in GranToGrid subsections for Previous Ice Age and Snow Ice Cover. 06Sep06 – Updated Input/Output tables to reflect new CSNs and algorithm changes for Build 1.5. 11Sep06 – Updated Input table to reflect MOD TC GEO as input to DSR and Monthly SR/BT/VI GranToGrid. 09Nov06 – Removed what was Section 5: Operational Code Verification Test Datasets because these unit test procedures are no longer being incorporated into OADs. 27Nov06 – Filled in GranToGrid subsections for Daily Surface Reflectance and Monthly SR/BT/VI. 19Dec06 – Action Item work-off from GranToGrid DDPR. 08Jan07 – Updated for GridToGrid CMN DDPR. 05Feb07 – Updated for GridToGrid DDPR. 23Mar07 – Updated GridToGran Consumers table for VFM as consumer of QST-LWM. 09Apr07 – Updated Table 2.1-2 GIP Sizes. Resolved TBD01 and TBD02, updated TBD table accordingly. 03Jul07 – Updated for B1.5 Completion.	All
A3	7-12-07	Delivered to NGST.	All
A4	11-28-07	Updated to incorporate indirect indexing	All
A5	1-23-08	Removed future tense (will) in response to PR AI.	All

Check the JPSS MIS Server at https://jpssmis.gsfc.nasa.gov/frontmenu_dsp.cfm to verify that this is the correct version prior to use

Northrop Grumman Space & Mission Systems Corp.
Space Technology
One Space Park
Redondo Beach, CA 90278

NORTHROP GRUMMAN

Raytheon

Revision/Change Record

Document Number D39303

Revision	Document Date	Revision/Change Description	Pages Affected
A6	2-7-08	Updated to incorporate GIP Exclusion	All
A7	5-23-08	Updated the GridToGrid LSA Coeff input. Update the DSR Tile format to reflect TMAXOBS before Bands on surface reflectance.	All
A8	6-13-08	Delivered to NGST.	All
A9	6-16-08	Accept all changes for fresh baseline.	All
A10	6-24-08	Divided section 2.1.2 into 3 parts for VIIRS, OMPS, and CrIS specific pixel-to-grid-cell mappings. Added explanation of CrIS pixel-to-grid-cell mappings. Added sections 2.1.3.3 and 2.1.3.4 for OMPS and CrIS mapping IPs, respectively. Added Tables 8 and 9.	All
A11	9-5-08	Updated Graceful Degradation. Updated to incorporate the remaining GIP to be scaled.	All
A12	9-16-08	Updated to remove Previous Ice Age.	All
A13	10-1-08	Prepared for TIM/ACCB.	All
A	12-17-08	Addressed TIM/ACCB comments. ECR A-171 Rev. A.	All
B1	1-21-09	Updated for CDA RFA Nos. 295 & 296.	Tables 64, 65, 68, 71. 72, 79 & 80
B	2-11-09	Updated for 2/04/09 TIM comments. Final edits (all pages) for Rev B Delivery to ARB/ACCB.	Tables: 25, 64, 65, 68, 71,72,76,79-83, 85-87 All
C1	2-19-09	Changed surface type water value from 0 to 17 per TM NP-EMD-2008.510.0070	Table 19,20
C2	11-04-09	Completed RFA 297 and Updated for SDRL.	Table 88
C3	01-13-10	Implemented NP-EMD.2009.510.0048 Rev A VIIRS Geo Quality Flags Logic Updates, prepared for TIM; proposed new title, and updated the SCN.	Table 46
C	3-17-10	Submitted to ACCB	Coversheets
D1	5-24-10	Added CrIS and OMPS granulated GIP formats	Tables 17 & 21
D2	7-08-10	Updated for OAD Giver UID 35077	All
D3	9-07-10	Implemented NP-EMD.2010.510.0038 Roujean kernel correction for the VIIRS gridded surface albedo IP	All

Check the JPSS MIS Server at https://jpssmis.gsfc.nasa.gov/frontmenu_dsp.cfm to verify that this is the correct version prior to use

Northrop Grumman Space & Mission Systems Corp. Space Technology One Space Park Redondo Beach, CA 90278	NORTHROP GRUMMAN Raytheon

Revision/Change Record	**Document Number D39303**

Revision	Document Date	Revision/Change Description	Pages Affected
D4	10-14-10	Updated due to document convergence to include tech memo 2010.510.0013	All
D5	09-29-11	Updated for PCR 027829	20

Check the JPSS MIS Server at https://jpssmis.gsfc.nasa.gov/frontmenu_dsp.cfm to verify that this is the correct version prior to use

Table of Contents

1.0 INTRODUCTION 1
1.1 Objective 1
1.2 Scope 1
1.3 References 1
1.3.1 Document References 1
1.3.2 Source Code References 3
2.0 ALGORITHM OVERVIEW 5
2.1 Gridded IP Overview 5
2.1.1 Sinusoidal Map 6
2.1.2 Pixel-To-Cell Mapping 9
2.1.2.1 VIIRS SDR 10
2.1.2.2 OMPS TC SDR 10
2.1.2.3 CrIS SDR 11
2.1.3 Mapping IPs 11
2.1.3.1 VIIRS Nearest Neighbor IP 12
2.1.3.2 VIIRS Area Weight Calculator IP 13
2.1.3.2.1 Pixel Shape and Smearing 13
2.1.3.2.2 Pixel Corners and Intersections 14
2.1.3.2.3 Pole Scenario 15
2.1.3.2.4 WCalc Grid Product 15
2.1.3.3 OMPS Mapping IPs 15
2.1.3.4 CrIS Mapping IP 16
2.1.4 Indirect Indexing 16
2.1.5 Tile Interfaces 17
2.1.6 GIP Exclusions 17
2.1.7 GridToGran 18
2.1.7.1 doProcessing() 19
2.1.8 GranToGrid 19
2.1.8.1 doProcessing() 20
2.1.8.2 calculateXXX() 20
2.1.8.3 fillTileInterface() 20
2.1.9 GridToGrid 20
2.1.9.1 doProcessing() 21
2.1.10 VIIRS GridToGran Controller 21
2.1.10.1 Execution Point 21
2.1.11 VIIRS GridToGrid Dispatchers 21

Check the JPSS MIS Server at https://jpssmis.gsfc.nasa.gov/frontmenu_dsp.cfm to verify that this is the correct version prior to use

2.1.12 Gridded IP Tables 22
2.1.13 Graceful Degradation 24
2.1.13.1 Graceful Degradation Inputs 24
2.1.13.2 Graceful Degradation Processing 24
2.1.13.3 Graceful Degradation Outputs 24
2.1.14 Exception Handling 24
2.1.15 Data Quality Monitoring 24
2.1.16 Computational Precision Requirements 24
2.1.17 Algorithm Support Considerations 24
2.1.18 Assumptions and Limitations 24
2.2 Snow Ice Cover Description 25
2.2.1 Interfaces 25
2.2.1.1 Inputs 25
2.2.1.1.1 GridToGran Inputs 25
2.2.1.1.2 GranToGrid Inputs 26
2.2.1.2 Outputs 28
2.2.1.2.1 GridToGran Outputs 28
2.2.1.2.2 GranToGrid Outputs 29
2.2.2 Algorithm Processing 29
2.2.2.1 GridToGran 29
2.2.2.2 GranToGrid 29
2.2.3 Graceful Degradation 30
2.2.3.1 Graceful Degradation Inputs 30
2.2.3.2 Graceful Degradation Processing 30
2.2.3.3 Graceful Degradation Outputs 30
2.2.4 Exception Handling 30
2.2.5 Data Quality Monitoring 30
2.2.6 Computational Precision Requirements 30
2.2.7 Algorithm Support Considerations 30
2.2.8 Assumptions and Limitations 30
2.3 Quarterly Surface Type Description 30
2.3.1 Interfaces 31
2.3.1.1 Inputs (GridToGran) 31
2.3.1.2 Outputs (GridToGran) 32
2.3.2 Algorithm Processing 33
2.3.2.1 GridToGran 33

Check the JPSS MIS Server at https://jpssmis.gsfc.nasa.gov/frontmenu_dsp.cfm to verify that this is the correct version prior to use

2.3.3 Graceful Degradation 33
2.3.3.1 Graceful Degradation Inputs 33
2.3.3.2 Graceful Degradation Processing 33
2.3.3.3 Graceful Degradation Outputs 33
2.3.4 Exception Handling 34
2.3.5 Data Quality Monitoring 34
2.3.6 Computational Precision Requirements 34
2.3.7 Algorithm Support Considerations 34
2.3.8 Assumptions and Limitations 34
2.4 Quarterly Surface Type – Land Water Mask Description 34
2.4.1 Interfaces 35
2.4.1.1 Inputs (GridToGran) 35
2.4.1.2 Outputs (GridToGran) 35
2.4.2 Algorithm Processing 36
2.4.2.1 GridToGran 36
2.4.3 Graceful Degradation 36
2.4.3.1 Graceful Degradation Inputs 36
2.4.3.2 Graceful Degradation Processing 36
2.4.3.3 Graceful Degradation Outputs 36
2.4.4 Exception Handling 36
2.4.5 Data Quality Monitoring 37
2.4.6 Computational Precision Requirements 37
2.4.7 Algorithm Support Considerations 37
2.4.8 Assumptions and Limitations 37
2.5 Annual Max/Min NDVI Description 37
2.5.1 Interfaces 37
2.5.1.1 Inputs (GridToGran) 37
2.5.1.2 Outputs (GridToGran) 39
2.5.2 Algorithm Processing 39
2.5.2.1 GridToGran 39
2.5.3 Graceful Degradation 39
2.5.3.1 Graceful Degradation Inputs 39
2.5.3.2 Graceful Degradation Processing 39
2.5.3.3 Graceful Degradation Outputs 39
2.5.4 Exception Handling 40
2.5.5 Data Quality Monitoring 40

Check the JPSS MIS Server at https://jpssmis.gsfc.nasa.gov/frontmenu_dsp.cfm to verify that this is the correct version prior to use

2.5.6 Computational Precision Requirements 40
2.5.7 Algorithm Support Considerations 40
2.5.8 Assumptions and Limitations 40
2.6 Land Surface Albedo Description 40
2.6.1 Interfaces 41
2.6.1.1 Inputs 41
2.6.1.1.1 GridToGran Inputs 41
2.6.1.1.2 GridToGrid Inputs 42
2.6.1.2 Outputs 48
2.6.1.2.1 GridToGran Outputs 48
2.6.1.2.2 GridToGrid Outputs 48
2.6.2 Algorithm Processing 50
2.6.2.1 GridToGran 50
2.6.2.2 GridToGrid 50
2.6.3 Graceful Degradation 50
2.6.3.1 Graceful Degradation Inputs 50
2.6.3.2 Graceful Degradation Processing 50
2.6.3.3 Graceful Degradation Outputs 51
2.6.4 Exception Handling 51
2.6.5 Data Quality Monitoring 51
2.6.6 Computational Precision Requirements 51
2.6.7 Algorithm Support Considerations 51
2.6.8 Assumptions and Limitations 51
2.7 Daily Surface Reflectance Description 51
2.7.1 Interfaces 52
2.7.1.1 Inputs 52
2.7.1.1.1 GranToGrid Inputs 52
2.7.1.1.2 GridToGrid Inputs 62
2.7.1.2 Outputs (GranToGrid and GridToGrid) 65
2.7.2 Algorithm Processing 67
2.7.2.1 GranToGrid 67
2.7.2.2 GridToGrid 68
2.7.3 Graceful Degradation 68
2.7.3.1 Graceful Degration Inputs 68
2.7.3.2 Graceful Degradation Processing 68
2.7.3.3 Graceful Degradation Outputs 68

Check the JPSS MIS Server at https://jpssmis.gsfc.nasa.gov/frontmenu_dsp.cfm to verify that this is the correct version prior to use

2.7.4 Exception Handling 68
2.7.5 Data Quality Monitoring 68
2.7.6 Computational Precision Requirements 68
2.7.7 Algorithm Support Considerations 68
2.7.8 Assumptions and Limitations 68
2.8 Monthly SR/BT/VI Description 68
2.8.1 Interfaces 69
2.8.1.1 Inputs 69
2.8.1.1.1 GranToGrid Inputs 69
2.8.1.1.2 GridToGrid Post Comp Inputs 80
2.8.1.1.3 GridToGrid Init Inputs 82
2.8.1.2 Outputs 84
2.8.1.2.1 GranToGrid and GridToGrid Initialization Outputs 84
2.8.1.2.2 GridToGrid Post Comp Outputs 84
2.8.2 Algorithm Processing 85
2.8.2.1 GranToGrid 85
2.8.2.2 GridToGrid 86
2.8.3 Graceful Degradation 86
2.8.3.1 Graceful Degration Inputs 86
2.8.3.2 Graceful Degradation Processing 86
2.8.3.3 Graceful Degradation Outputs 86
2.8.4 Exception Handling 86
2.8.5 Data Quality Monitoring 86
2.8.6 Computational Precision Requirements 87
2.8.7 Algorithm Support Considerations 87
2.8.8 Assumptions and Limitations 87
2.9 NBAR-NDVI Description 87
2.9.1 Interfaces 87
2.9.1.1 Inputs 87
2.9.1.1.1 Common Inputs 87
2.9.1.1.2 GridToGran Inputs 88
2.9.1.1.3 GridToGrid 17 Day Inputs 88
2.9.1.1.4 GridToGrid Rolling Inputs 90
2.9.1.1.5 GridToGrid Monthly Inputs 91
2.9.1.2 Outputs 92
2.9.1.2.1 GridToGran Outputs 92

Check the JPSS MIS Server at https://jpssmis.gsfc.nasa.gov/frontmenu_dsp.cfm to verify that this is the correct version prior to use

2.9.1.2.2 GridToGrid 17 Day Outputs 92
2.9.1.2.3 GridToGrid Rolling Outputs 92
2.9.1.2.4 GridToGrid Monthly Outputs 93
2.9.2 Algorithm Processing 93
2.9.2.1 GridToGran 93
2.9.2.2 GridToGrid 93
2.9.3 Graceful Degradation 93
2.9.3.1 Graceful Degradation Inputs 93
2.9.3.2 Graceful Degradation Processing 94
2.9.3.3 Graceful Degradation Outputs 94
2.9.4 Exception Handling 94
2.9.5 Data Quality Monitoring 94
2.9.6 Computational Precision Requirements 94
2.9.7 Algorithm Support Considerations 94
2.9.8 Assumptions and Limitations 94
3.0 GLOSSARY/ACRONYM LIST 95
3.1 Glossary 95
3.2 Acronyms 98
4.0 OPEN ISSUES 99

Check the JPSS MIS Server at https://jpssmis.gsfc.nasa.gov/frontmenu_dsp.cfm to verify that this is the correct version prior to use

List of Figures

Figure 1. General Processing Chain Interrelationships Diagram 5
Figure 2. Sinusoidal Projection Map 6
Figure 3. Tiled Sinusoidal Projection Map 7
Figure 4. Granule Viewer 8
Figure 5. Nearest Neighbor Mapping 12
Figure 6. WCalc Interrelationships Diagram 13
Figure 7. Pixel Response Functions 14
Figure 8. Indirect Indexing Example 17
Figure 9. Snow Ice Cover Interrelationships Diagram 25
Figure 10. Quarterly Surface Type Interrelationships Diagram 31
Figure 11. Quarterly Surface Type Land Water Mask Interrelationships Diagram 34
Figure 12. Annual Max/Min NDVI Interrelationships Diagram 37
Figure 13. Land Surface Albedo Interrelationships Diagram 40
Figure 14. Daily Surface Reflectance Interrelationships Diagram 52
Figure 15. Monthly Surface Reflectance / Brightness Temperature / Vegetation Index Interrelationships Diagram 69
Figure 16. NBAR-NDVI Interrelationships Diagram 87

List of Tables

Table 1. Reference Documents 1
Table 2. Source Code References 3
Table 3. GIP Algorithm Summary 22
Table 4. GIP Sizes 22
Table 5. GridToGran Consumers 23
Table 6. OMPS GIP Algorithm Summary 23
Table 7. OMPS GridToGran Consumers 23
Table 8. CrIS GIP Algorithm Summary 23
Table 9. CrIS GridToGran Consumers 24
Table 10. GridToGran Snow Ice Cover Input: VIIRS Area Weight IP Gran Product (VIIRS-Grid-To-Gran-GridIP-AW-SWATH-Mod-IP) 25
Table 11. GridToGran Snow Ice Cover Input: Snow Ice Cover GIP Tiles (GridIP-VIIRS-Snow-Ice-Cover-Rolling-Tile) 26
Table 12. GranToGrid Snow Ice Cover Input: Nearest Neighbor Imagery IP (VIIRS-GridIP-NN-Img-IP) 26
Table 13. GranToGrid Snow Ice Cover Input: VIIRS Snow Cover/Depth EDR (VIIRS-SCD-BINARY-SNOW-MAP-FEDR) 27
Table 14. GranToGrid Snow Ice Cover Input: VIIRS Ice Concentration IP (VIIRS-I-Conc-IP) 28

Check the JPSS MIS Server at https://jpssmis.gsfc.nasa.gov/frontmenu_dsp.cfm to verify that this is the correct version prior to use

Table 15. GranToGrid Snow Ice Cover Tunable Parameters and Processing Coefficients..... 28

Table 16. GridToGran Snow Ice Cover Output: Granulated VIIRS Snow Ice Cover (VIIRS-GridIP-VIIRS-Snow-Ice-Cover-Mod-Gran) 28

Table 17. GridToGran Snow Ice Cover Output: Granulated VIIRS Snow Ice Cover (OMPS-TC-GridIP-VIIRS-Snow-Ice-Fraction-Gran) 29

Table 18. GranToGrid Snow Ice Cover Output: Snow Ice Cover GIP Tiles (GridIP-VIIRS-Snow-Ice-Cover-Rolling-Tile) 29

Table 19. GridToGran Quarterly Surface Type Input: VIIRS Area Weight IP Gran Product (VIIRS-Grid-To-Gran-GridIP-AW-SWATH-Mod-IP)..... 31

Table 20. GridToGran Quarterly Surface Type Input: VIIRS Quarterly Surface Type GridIP Tiles (GridIP-VIIRS-Qst-Quarterly-Tile)..... 32

Table 21. GridToGran Quarterly Surface Type Output: Granulated Quarterly Surface Type (CRIS-GIP-LAND-FRAC-Gran) 32

Table 22. GridToGran Quarterly Surface Type Output: Granulated Quarterly Surface Type (VIIRS-GridIP-VIIRS-Qst-Mod-Gran)..... 33

Table 23. GridToGran Quarterly Surface Type – Land Water Mask Input: VIIRS Area Weight IP Gran Product (VIIRS-Grid-To-Gran-GridIP-AW-SWATH-Mod-IP) 35

Table 24. GridToGran Quarterly Surface Type – Land Water Mask Input: VIIRS Quarterly Surface Type – Land Water Mask GridIP Tiles (GridIP-VIIRS-Qst-Lwm-Quarterly-Tile) 35

Table 25. GridToGran Quarterly Surface Type – Land Water Mask Output: Granulated Quarterly Surface Type – Land Water Mask (VIIRS-GridIP-VIIRS-Qst-Lwm-Mod-Gran) ... 36

Table 26. GridToGran Annual Max/Min NDVI Input: VIIRS Area Weight IP Gran Product (VIIRS-Grid-To-Gran-GridIP-AW-SWATH-Mod-IP)..... 38

Table 27. GridToGran Annual Max/Min NDVI Input: Annual Max/Min NDVI Tiles (GridIP-VIIRS-Ann-Max-Min-Ndvi-Quarterly-Tile)..... 38

Table 28. GridToGran Annual Max/Min NDVI Input: Sinusoidal Map Earth/Land Lookup Table (VIIRS-Grid-SIN-Tiles-Earth-Land-LUT)..... 38

Table 29. GridToGran Annual Max/Min NDVI Input: Master Land Index Tiles (GridIP-VIIRS-MLI-Tile) 38

Table 30. GridToGran Annual Max/Min NDVI Output: Granulated VIIRS Annual Max/Min NDVI (VIIRS-GridIP-VIIRS-Ann-Max-Min-Ndvi-Mod-Gran) 39

Table 31. GridToGran Land Surface Albedo Input: VIIRS Area Weight IP Gran Product (VIIRS-Grid-To-Gran-GridIP-AW-SWATH-Mod-IP)..... 41

Table 32. GridToGran Land Surface Albedo Input: VIIRS Land Surface Albedo GridIP Tiles (GridIP-VIIRS-Land-Surf-Albedo-17Day-Tile) 41

Table 33. GridToGran Land Surface Albedo Input: Sinusoidal Map Earth/Land Lookup Table (VIIRS-Grid-SIN-Tiles-Earth-Land-LUT)..... 42

Table 34. GridToGran Land Surface Albedo Input: Master Land Index Tiles (GridIP-VIIRS-MLI-Tile) 42

Table 35. GridToGrid Land Surface Albedo Input: Daily Surface Reflectance GIP Tiles (GridIP-VIIRS-Daily-Surf-Refl-Daily-Tile) 43

Table 36. GridToGrid Land Surface Albedo Input: BRDF Archetypal GIP Tiles (GridIP-VIIRS-Brdf-Arch-17Day-Tile)..... 45

Check the JPSS MIS Server at https://jpssmis.gsfc.nasa.gov/frontmenu_dsp.cfm to verify that this is the correct version prior to use

Table 37. GridToGrid Land Surface Albedo Input: VIIRS Land Surface Albedo GridIP Tiles (GridIP-VIIRS-Land-Surf-Albedo-17Day-Tile) 46

Table 38. GridToGrid Land Surface Albedo Input: Land Surface Albedo Lookup Table (VIIRS-LSA-KERNEL-ALBEDO-LUT) 47

Table 39. GridToGrid Land Surface Albedo Input: Land Surface Albedo GridToGrid Processing Coefficients (VIIRS-GridToGrid-LSA-AC-Int) 47

Table 40. GridToGrid Land Surface Albedo Input: Sinusoidal Map Earth/Land Lookup Table (VIIRS-Grid-SIN-Tiles-Earth-Land-LUT) 47

Table 41. GridToGrid Land Surface Albedo Input: Master Land Index Tiles (GridIP-VIIRS-MLI-Tile) 47

Table 42. GridToGran Land Surface Albedo Output: Granulated Land Surface Albedo (VIIRS-GridIP-VIIRS-Land-Surf-Albedo-Mod-Gran) 48

Table 43. GridToGrid Land Surface Albedo Output: BRDF Archetypal GIP Tiles (GridIP-VIIRS-Brdf-Arch-17Day-Tile) 48

Table 44. GridToGrid Land Surface Albedo Output: VIIRS Land Surface Albedo GridIP Tiles (GridIP-VIIRS-Land-Surf-Albedo-17Day-Tile) 49

Table 45. GranToGrid Daily Surface Reflectance Input: VIIRS Area Weight IP Grid Product (VIIRS-Gran-To-Grid-GridIP-AW-GRID-Mod-IP) 52

Table 46. GranToGrid Daily Surface Reflectance Input: VIIRS Surface Reflectance IP (VIIRS-Surf-Refl-IP) 53

Table 47. GranToGrid Daily Surface Reflectance Input: VIIRS Snow Cover/Depth EDR (VIIRS-SCD-BINARY-SNOW-MAP-FEDR) 56

Table 48. GranToGrid Daily Surface Reflectance Input: VIIRS Moderate Terrain Corrected Geolocation (VIIRS-MOD-RGEO-TC) 58

Table 49. GranToGrid Daily Surface Reflectance Input: Daily Surface Reflectance GIP Tiles (GridIP-VIIRS-Daily-Surf-Refl-Daily-Tile) 59

Table 50. GranToGrid Daily Surface Reflectance Input: Sinusoidal Map Earth/Land Lookup Table (VIIRS-Grid-SIN-Tiles-Earth-Land-LUT) 61

Table 51. GranToGrid Daily Surface Reflectance Input: Master Land Index Tiles (GridIP-VIIRS-MLI-Tile) 62

Table 52. GridToGrid Daily Surface Reflectance Input: Daily Surface Reflectance GIP Template Tiles (GridIP-VIIRS-Daily-Surf-Refl-Template-Daily-Tile) 62

Table 53. GridToGrid Daily Surface Reflectance Input: Sinusoidal Map Earth/Land Lookup Table (VIIRS-Grid-SIN-Tiles-Earth-Land-LUT) 64

Table 54. GridToGrid Daily Surface Reflectance Input: Master Land Index Tiles (GridIP-VIIRS-MLI-Tile) 65

Table 55. GranToGrid and GridToGrid Daily Surface Reflectance Output: Daily Surface Reflectance GIP Tiles (GridIP-VIIRS-Daily-Surf-Refl-Daily-Tile) 65

Table 56. GranToGrid Monthly Surface Reflectance / Brightness Temperature / Vegetation Index Input: VIIRS Area Weight IP Grid Product (VIIRS-Gran-To-Grid-GridIP-AW-GRID-Mod-IP) 69

Table 57. GranToGrid Monthly Surface Reflectance / Brightness Temperature / Vegetation Index Input: VIIRS Surface Reflectance IP (VIIRS-Surf-Refl-IP) 70

Check the JPSS MIS Server at https://jpssmis.gsfc.nasa.gov/frontmenu_dsp.cfm to verify that this is the correct version prior to use

Table 58. GranToGrid Monthly Surface Reflectance / Brightness Temperature / Vegetation Index Input: VIIRS SDR BT Band 12 (VIIRS-M12-FSDR) 72

Table 59. GranToGrid Monthly Surface Reflectance / Brightness Temperature / Vegetation Index Input: VIIRS SDR BT Band 13 (VIIRS-M13-SDR) 74

Table 60. GranToGrid Monthly Surface Reflectance / Brightness Temperature / Vegetation Index Input: VIIRS SDR BT Band 14 (VIIRS-M14-FSDR) 75

Table 61. GranToGrid Monthly Surface Reflectance / Brightness Temperature / Vegetation Index Input: VIIRS SDR BT Band 15 (VIIRS-M15-FSDR) 76

Table 62. GranToGrid Monthly Surface Reflectance / Brightness Temperature / Vegetation Index Input: VIIRS SDR BT Band 16 (VIIRS-M16-FSDR) 77

Table 63. GranToGrid Monthly Surface Reflectance / Brightness Temperature / Vegetation Index Input: VIIRS Moderate Terrain Corrected Geolocation (VIIRS-MOD-RGEO-TC) 79

Table 64. GranToGrid Monthly Surface Reflectance / Brightness Temperature / Vegetation Index Input: Sinusoidal Map Earth/Land Lookup Table (VIIRS-Grid-SIN-Tiles-Earth-Land-LUT) 80

Table 65. GranToGrid Monthly Surface Reflectance / Brightness Temperature / Vegetation Index Input: Master Land Index Tiles (GridIP-VIIRS-MLI-Tile) 80

Table 66. GridToGrid Monthly Surface Reflectance / Brightness Temperature / Vegetation Index Post Compositing Input: Monthly SR/BT/VI Tiles (GridIP-VIIRS-Mth-SR-BT-VI-Monthly-Tile) 80

Table 67. GridToGrid Monthly Surface Reflectance / Brightness Temperature / Vegetation Index Post Compositing Input: Monthly SR/BT/VI Final Tiles (GridIP-VIIRS-Mth-SR-BT-VI-Monthly-Final-Tile) 81

Table 68. GridToGrid Monthly Surface Reflectance / Brightness Temperature / Vegetation Index Post Compositing Input: Sinusoidal Map Earth/Land Lookup Table (VIIRS-Grid-SIN-Tiles-Earth-Land-LUT) 82

Table 69. GridToGrid Monthly Surface Reflectance / Brightness Temperature / Vegetation Index Post Compositing Input: Master Land Index Tiles (GridIP-VIIRS-MLI-Tile) 82

Table 70. GridToGrid Monthly Surface Reflectance / Brightness Temperature / Vegetation Index Initialization Input: Monthly SR/BT/VI Template Tiles (GridIP-VIIRS-Mth-SR-BT-VI-Template-Monthly-Tile) 82

Table 71. GridToGrid Monthly Surface Reflectance / Brightness Temperature / Vegetation Index Initialization Input: Sinusoidal Map Earth/Land Lookup Table (VIIRS-Grid-SIN-Tiles-Earth-Land-LUT) 83

Table 72. GridToGrid Monthly Surface Reflectance / Brightness Temperature / Vegetation Index Initialization Input: Master Land Index Tiles (GridIP-VIIRS-MLI-Tile) 83

Table 73. GranToGrid Monthly Surface Reflectance / Brightness Temperature / Vegetation Index Output: Monthly SR/BT/VI Tiles (GridIP-VIIRS-Mth-SR-BT-VI-Monthly-Tile) 84

Table 74. GridToGrid Monthly Surface Reflectance / Brightness Temperature / Vegetation Index Post Compositing Output: Monthly SR/BT/VI Final Tiles (GridIP-VIIRS-Mth-SR-BT-VI-Monthly-Final-Tile) 84

Table 75. NBAR-NDVI Common Input: Sinusoidal Map Earth/Land Lookup Table (VIIRS-Grid-SIN-Tiles-Earth-Land-LUT) 87

Table 76. NBAR-NDVI Common Input: Master Land Index Tiles (GridIP-VIIRS-MLI-Tile) 88

Check the JPSS MIS Server at https://jpssmis.gsfc.nasa.gov/frontmenu_dsp.cfm to verify that this is the correct version prior to use

Table 77. GridToGran NBAR-NDVI Input: VIIRS Area Weight IP Gran Product (VIIRS-Grid-To-Gran-GridIP-AW-SWATH-Mod-IP) 88
Table 78. GridToGran NBAR-NDVI Input: VIIRS NBAR-NDVI Rolling Tiles (GridIP-VIIRS-Nbar-Ndvi-Rolling-Tile) 88
Table 79. GridToGrid NBAR-NDVI 17 Day Input: VIIRS Land Surface Albedo GridIP Tiles (GridIP-VIIRS-Land-Surf-Albedo-17Day-Tile) 89
Table 80. GridToGrid NBAR-NDVI 17 Day Input: BRDF Archetypal GIP Tiles (GridIP-VIIRS-Brdf-Arch-17Day-Tile) 90
Table 81. GridToGrid NBAR-NDVI Rolling Input: VIIRS NBAR-NDVI 17 Day Tiles (GridIP-VIIRS-Nbar-Ndvi-17Day-Tile) 90
Table 82. GridToGrid NBAR-NDVI Rolling Input: VIIRS NBAR-NDVI Monthly Climatology Tiles (GridIP-VIIRS-Nbar-Ndvi-Monthly-Tile) 90
Table 83. GridToGrid NBAR-NDVI Rolling Input: VIIRS NBAR-NDVI Rolling Tiles (GridIP-VIIRS-Nbar-Ndvi-Rolling-Tile) 91
Table 84. GridToGrid NBAR-NDVI Monthly Input: VIIRS NBAR-NDVI 17 Day Tiles (GridIP-VIIRS-Nbar-Ndvi-17Day-Tile) 91
Table 85. GridToGrid NBAR-NDVI Monthly Input: VIIRS NBAR-NDVI Monthly Climatology Tiles (GridIP-VIIRS-Nbar-Ndvi-Monthly-Tile) 91
Table 86. GridToGran NBAR-NDVI Output: Granulated VIIRS NBAR-NDVI (VIIRS-GridIP-VIIRS-Nbar-Ndvi-Mod-Gran) 92
Table 87. GridToGrid NBAR-NDVI 17 Day Output: VIIRS NBAR-NDVI 17 Day Tiles (GridIP-VIIRS-Nbar-Ndvi-17Day-Tile) 92
Table 88. GridToGrid NBAR-NDVI Rolling Output: VIIRS NBAR-NDVI Rolling Tiles (GridIP-VIIRS-Nbar-Ndvi-Rolling-Tile) 92
Table 89. GridToGrid NBAR-NDVI Monthly Output: VIIRS NBAR-NDVI Monthly Climatology Tiles (GridIP-VIIRS-Nbar-Ndvi-Monthly-Tile) 93
Table 90. Glossary 95
Table 91. Acronyms 98
Table 92. TBXs 99

Check the JPSS MIS Server at https://jpssmis.gsfc.nasa.gov/frontmenu_dsp.cfm to verify that this is the correct version prior to use

1.0 INTRODUCTION

1.1 Objective

The purpose of the Operational Algorithm Description (OAD) document is to express, in computer-science terms, the remote sensing algorithms that produce the National Polar-Orbiting Operational Environmental Satellite System (NPOESS) end-user data products. These products are individually known as Raw Data Records (RDRs), Temperature Data Records (TDRs), Sensor Data Records (SDRs) and Environmental Data Records (EDRs). In addition, any Intermediate Products (IPs) produced in the process are also described in the OAD.

The science basis of an algorithm is described in a corresponding Algorithm Theoretical Basis Document (ATBD). The OAD provides a software description of that science as implemented in the operational ground system -- the Data Processing Element (DPE).

The purpose of an OAD is two-fold:

1. Provide initial implementation design guidance to the operational software developer.
2. Capture the “as-built” operational implementation of the algorithm reflecting any changes needed to meet operational performance/design requirements.

An individual OAD document describes one or more algorithms used in the production of one or more data products. There is a general, but not strict, one-to-one correspondence between OAD and ATBD documents. This particular document describes operational software implementation for the Visible/Infrared Imager/Radiometer Suite (VIIRS) Gridded Intermediate Products (GIPs).

1.2 Scope

The scope of this document is limited to the description of the core operational algorithms required to create and granulate the VIIRS GIPs. The theoretical basis for these algorithms is described in Section 4.3 of the VIIRS Earth Gridding Algorithm Theoretical Basis Document ATBD, 474-00028.

1.3 References

1.3.1 Document References

The science and system engineering documents relevant to the algorithms described in this OAD are listed in Table 1.

Table 1. Reference Documents

Document Title	Document Number/Revision	Revision Date
VIIRS Earth Gridding Algorithm Theoretical Basis Document ATBD)	474-00028	Latest
VIIRS Surface Type Algorithm Theoretical Basis Document ATBD	474-00037	Latest
JPSS Environmental Data Record (EDR) Production Report (PR) for NPP	474-00012	Latest
JPSS Environmental Data Record (EDR) Interdependency Report (IR) for NPP	474-00007	Latest

Document Title	Document Number/Revision	Revision Date
NPP Mission Data Format Control Book and App A (MDFCB)	429-05-02-42_MDFCB	Latest
JPSS Data Format Control Book – Internal Volume III – Retained Intermediate Product Formats (IDFCB) – Block 1.2.3	474-00020-03-B0123 IDFCB Vol III	Latest
JPSS Common Data Format Control Book - External - –Block 1.2.2 (All Volumes)	474-00001-01-B0122 CDFCB-X Vol I 474-00001-02-B0122 CDFCB-X Vol II 474-00001-03-B0122 CDFCB-X Vol III 474-00001-04-01-B0122 CDFCB-X Vol IV Part 1 474-00001-04-02-B0122 CDFCB-X Vol IV Part 2 474-00001-04-03-B0122 CDFCB-X Vol IV Part 3 474-00001-04-04-B0122 CDFCB-X Vol IV Part 4 474-00001-05-B0122 CDFCB-X Vol V 474-00001-06-B0122 CDFCB-X Vol VI 474-00001-08-B0122 CDFCB-X Vol VIII	Latest
JPSS Common Data Format Control Book - External - Block 1.2.3 (All Volumes)	474-00001-01-B0123 CDFCB-X Vol I 474-00001-02-B0123 CDFCB-X Vol II 474-00001-03-B0123 CDFCB-X Vol III 474-00001-04-01-B0123 CDFCB-X Vol IV Part 1 474-00001-04-02-B0123 CDFCB-X Vol IV Part 2 474-00001-04-03-B0123 CDFCB-X Vol IV Part 3 474-00001-04-04-B0123 CDFCB-X Vol IV Part 4 474-00001-05-B0123 CDFCB-X Vol V 474-00001-06-B0123 CDFCB-X Vol VI 474-00001-08-B0123 CDFCB-X Vol VIII	Latest
JPSS CGS Data Processor Inter-subsystem Interface Control Document (DPIS ICD) Vol I – IV	IC60917-IDP-002	Latest
JPSS Program Lexicon	474-00175	Latest
VIIRS Gridding / Regridding DDD	Y3246 V5r6	17 Sep 2004
VIIRS Gridding / Regridding Component Level Software Architecture	Y3264 V5r6	17 Sep 2004
VIIRS Gridding / Regridding Component ICD	IC60822 V5rB	17 Sep 2004
VIIRS Gridding / Regridding Data Dictionary (Area Weighting)	DD60822 V5rA	17 Sep 2004
NGST/SE technical memo – Gridding_Regridding_OAD_Update_Memo2	NP-EMD.2006.510.0014 Rev. ---	19 Jan 2006
NGST/SE technical memo – NPP_VIIRS_Gridding_Regridding_OAD_Update	NP-EMD.2006.510.0027 Rev. ---	15 May 2006

Document Title	Document Number/Revision	Revision Date
NGST/SE technical memo – Gridding-Regridding OAD update	NP-EMD.2006.510.0089 Rev. A	28 Nov 2006
Operational Algorithm Description Document for VIIRS Surface Reflectance Intermediate Product (IP) Software	474-00069	Latest
Operational Algorithm Description Document for VIIRS Gridded Surface Albedo (GSA) Intermediate Products (IP)	474-00078	Latest
VIIRS-LAND-Albedo-DDD.doc	Y2483 V5r4	24 May 2004
Operational Algorithm Description Document for VIIRS Geolocation (GEO) Sensor Data Record (SDR) and Calibration (CAL) SDR	474-00090	Latest
Operational Algorithm Description Document for Common Geolocation	474-00091	Latest
NGAS/A&DP technical memo – Surface Type Indexing Update	NP-EMD-2008.510.0070	05 Dec 2008
NGAS/SE technical memo – VIIRS Geo Quality Flags Logic Updates	NP-EMD.2009.510.0048 Rev A	12 Oct 2009
NGAS/SE technical memo – Roujean kernel correction for the VIIRS gridded surface albedo IP	NP-EMD-2010.510.0038	05 May 2010
NGST/SE technical memos: PC_OAD_Last_Drop_Corrections	NPOESS GJM-2010.510.0013	22 Sep 2010

1.3.2 Source Code References

The science and operational code and associated documentation relevant to the algorithms described in this OAD are listed in Table 2.

Table 2. Source Code References

Reference Title	Reference Tag/Revision	Revision Date
VIIRS Gridding/Granulation (G/G) science-grade software	ISTN_VIIRS_ NGST_2.8	22 Sep 2004
NGST/SE technical memo – EM041210ISIN-M - Projection for VIIRS Internal Products	NP-EMD.2004.510.0054 Rev. ---	10 Dec 2004
NGST/SE technical memo – EM050105EVI-M - Removal of EVI calculation from regridding routines	NP-EMD.2005.510.0002 Rev. ---	05 Jan 2005
NGST/SE technical memo – QST_QF_Memo	NP-EMD.2005.510.0024 Rev. ---	10 Jan 2005
NGST/SE technical memo – Gridding_Regridding_memo	NP-EMD.2005.510.0013 Rev. ---	20 Jan 2005
NGST/SE technical memo – EMGMNonSnowSRIP-M	NP-EMD.2005.510.0040 Rev. ---	28 Mar 2005
NGST/SE technical memo – EMRGRmethod-M	NP-EMD.2005.510.0049 Rev. ---	05 Apr 2005
NGST/SE technical memo – Replace Olson Ecosystem in VCM	NP-EMD.2005.510.0083 Rev. ---	26 Jul 2005
NGST/SE technical memo – Gridding_NegWeight&IndErrorCorrection_memo	NP-EMD.2005.510.0123 Rev. ---	12 Oct 2005
NGST/SE technical memo – Albedo_IP_NBAR_MeanSolZen_Memo	NP-EMD.2005.510.0142 Rev. ---	29 Nov 2005
VIIRS Gridding/Granulation (G/G) science-grade software Includes NGST/SE technical memo – Gridding-Regridding OAD update NP-EMD.2006.510.0089 Rev. A	ISTN_VIIRS_NGST_4.4 (ECR A-111	08 Jan 2006
NGST/SE technical memo – NPP_VIIRS_GRG_ Compositing Code Bug Fix SPCR ALG991	NP-EMD.2006.510.0017 Rev. ---	14 Mar 2006
NGST/SE technical memo – Establishing an NBAR NDVI data base for use in the VIIRS Cloud Mask algorithm	NP-EMD.2005.510.0105 Rev. A	24 Mar 2006
NGST/SE technical memo –	NP-EMD.2006.510.0027 Rev. ---	15 May 2006

Check the JPSS MIS Server at https://jpssmis.gsfc.nasa.gov/frontmenu_dsp.cfm to verify that this is the correct version prior to use

Reference Title	Reference Tag/Revision	Revision Date
NPP_VIIRS_Gridding_Regridding_OAD_Update		
NGST/SE technical memo – NPP_VIIRS_5kmNBAR_NDVI_Averaging_Methodology	NP-EMD.2006.510.0040 Rev. ---	12 Jun 2006
NGST/SE technical memo – NPP_VIIRS_VCM_TOC NDVI Database Rqmts_RevC	NP-EMD.2005.510.0105 Rev. C	27 Jun 2006
NGST/SE technical memo – NPP_Gridding_Granulation_Geolocation	NP-EMD.2006.510.0041 Rev. ---	27 Jun 2006
NGST/SE technical memo – NPP_VIIRS_Surface_Type_Output_Rev_B	NP-EMD.2006.510.0050 Rev. B	14 Sep 2006
VIIRS Gridding/Granulation (G/G) operational software	B1.5 (OAD Rev A8)	May 2008
NGAS/A&DP technical memo – Surface Type Indexing Update	NP-EMD-2008.510.0070 (OAD Rev C1)	05 Dec 2008
SDRL	(OAD Rev C2)	04 Nov 2009
Operational Software (Includes PCR21471)	Sensor Characterization (Build SC-6) (OAD RevC3)	20 Jan 2010
ACCB (no code changes)	OAD Rev C	17 Mar 2010
Operational Software (Includes PCR020165)	Sensor Characterization (Build SC-10) (OAD Rev D1)	24 May 2010
NGAS/SE technical memo – Roujean kernel correction for the VIIRS gridded surface albedo IP NP-EMD-2010.510.0038 (Includes PCR023948)	Sensor Characterization (Build SC-14) (OAD Rev D3)	14 Sep 2010
Convergence Updates (No code updates)	(OAD Rev D4)	14 Oct 2010
PCR027829 (OAD update for ADL)	(OAD Rev D5)	29 Sep 2011
OAD transitioned to JPSS Program – this table is no longer updated.		

2.0 ALGORITHM OVERVIEW

2.1 Gridded IP Overview

Gridded Intermediate Products (GIPs) have been added into the operational system to support creation of Environmental Data Record (EDR) and Intermediate Products. GIP processing can be divided into three distinct parts: 1.) GridToGran, 2.) GranToGrid, and 3.) GridToGrid. Further, these three parts are each divided into several algorithms. The naming convention chosen denotes “Grid” as the Earth grid and “Gran” as the granule, while “To” indicates a direction such that the prefix is the source of the operation and the suffix is the destination of the operation. For example, GridToGran implies that the algorithm maps data from the Earth grid to the granule.

Some common software is required to support all of these GIP algorithms, and it is explained in this document. The GIPs are stored in a tiled Sinusoidal grid[1]. Pixel-To-Cell mappings are required for granule based GIP processing. A configuration-driven controller algorithm executes the GridToGran algorithms.

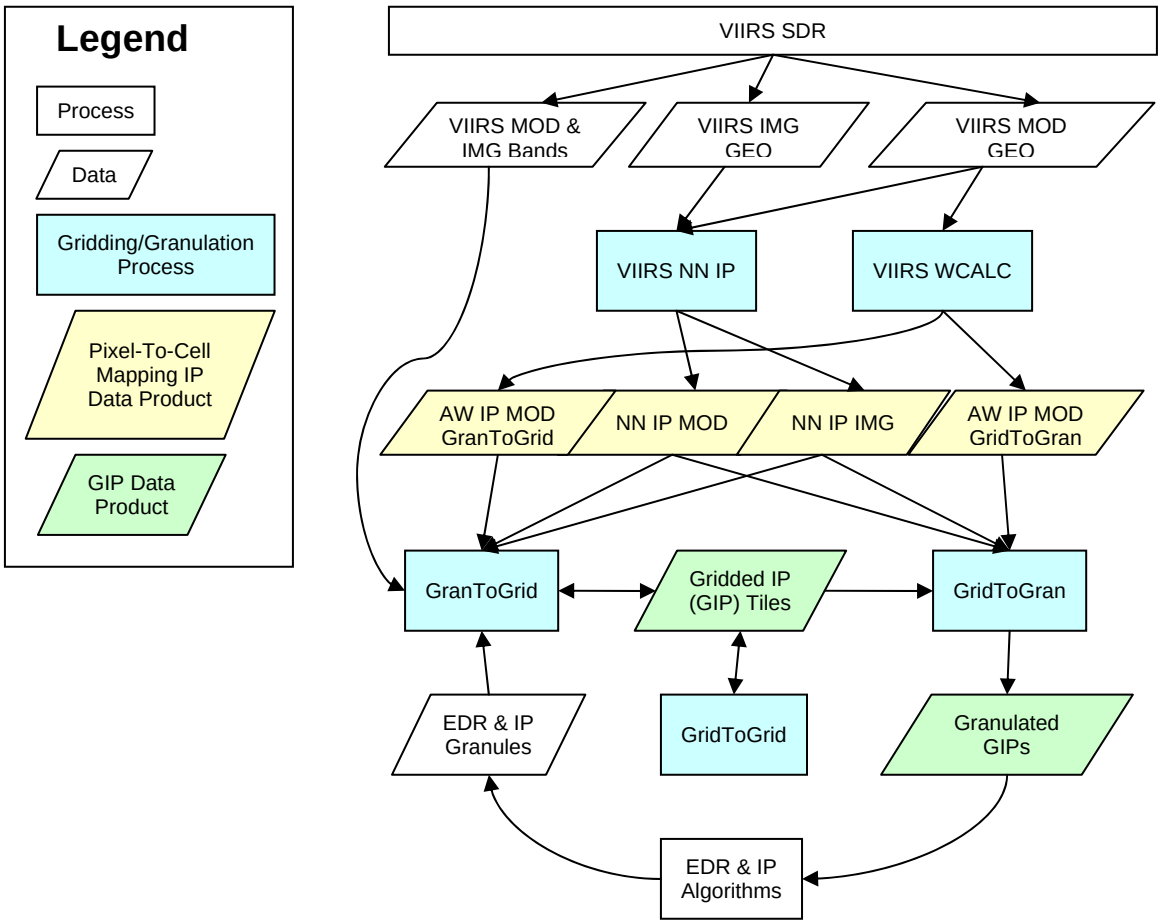

Figure **1**. General Processing Chain Interrelationships Diagram

[1] NGST delivered science-grade software using an Integerized Sinusoidal (ISIN) projection. Shortly after, NGST delivered Tech Memo NP-EMD.2004.510.0054 directing IDPS to convert all of the Gridding/Regridding software from ISIN to SIN.

The flow diagram in Figure 1 illustrates, at a high level, how GIP processing fits within the operational system. The specific algorithms are described in detail in Sections 2.2 - 2.10. There are several points to note from this diagram. The arrows denote inputs and outputs with respect to a general data dependency. For example, GranToGrid algorithms output Gridded IP Tiles, and have the following inputs: AW IP MOD GranToGrid, NN IP MOD, NN IP IMG, EDR & IP Granules, Gridded IP Tiles, and VIIRS MOD & IMG Bands. Note that this does not mean that every GranToGrid algorithm has SDR (VIIRS MOD & IMG Bands) inputs. For exact details of algorithm specific inputs and outputs, please see the interface sections for each algorithm.

Another important thing to note is the cyclic activity in the bottom portion of the diagram. GridToGran algorithms create Granulated GIPs as output from the Gridded IP Tiles. The Granulated GIPs are then inputs to the EDR and IP Algorithms, which in turn create EDR & IP Granules as output. The EDR and IP Granules are then inputs to the GranToGrid algorithms, which update the Gridded IP Tiles. The cycle repeats because those same, freshly updated, Gridded IP Tiles are again used as input to the GridToGran algorithms.

2.1.1 Sinusoidal Map

Each Gridded IP is represented as an Earth grid of approximately 1km2 cells, 21600 rows by 43200 columns, determined by a Sinusoidal projection. The Sinusoidal projection is referred to as an equal-area projection (i.e. the quadrilaterals formed by meridians and parallels have an area on the map proportional to their area on the globe). See Figure 2 below.

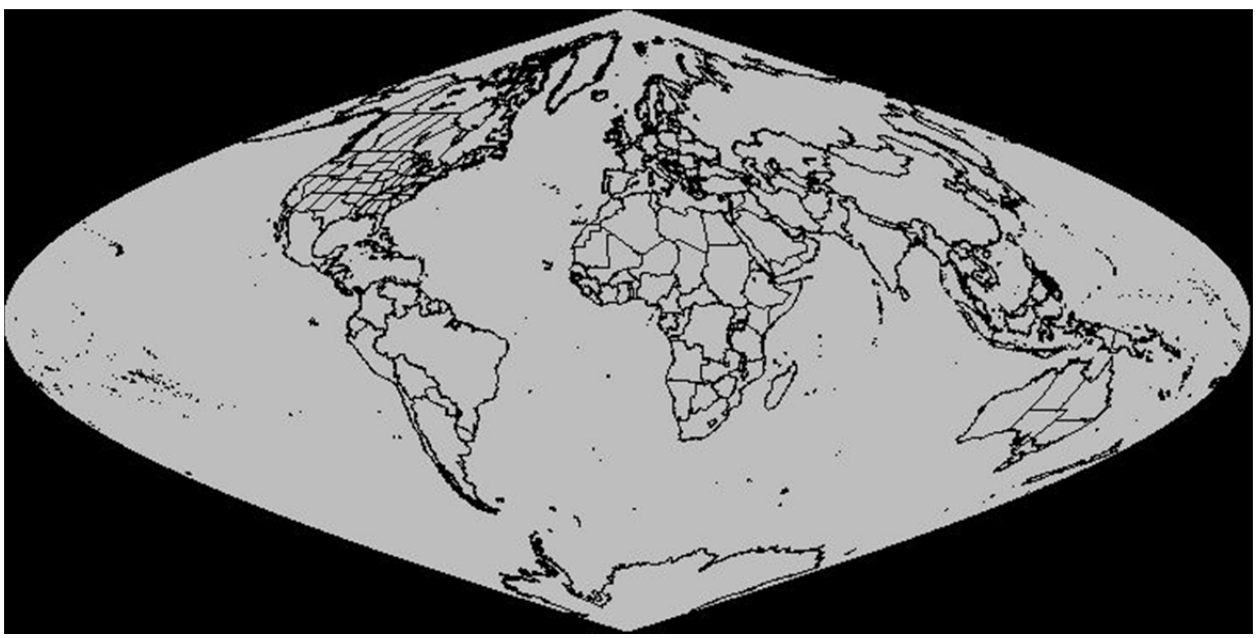

Figure 2. Sinusoidal Projection Map

The Earth grid is broken up into a collection of tiles, 72 rows by 72 columns; each containing 300 rows by 600 columns of grid cells. This tiling scheme evenly divides all of the Earth grid cells into the 5184 (72x72) tiles: 72x300=21600 and 72x600=43200. In terms of geographic area, at the Equator a tile is about 2.5 degrees latitude by 5 degrees longitude.

Recall that GIPs are stored as a collection of tiles, the grid cells of which are determined by the Sinusoidal projection. The image in Figure 3 shows how the tiles are divided across the grid. There are 5184 tiles (numbered 0000-5183 where 0000 is the upper left, 0071 is the upper right,

5112 is the lower left, and 5183 is the lower right). Several of the tiles are non Earth-Intersecting and are never created. Also, some of the GIPs are Land-Restricted (i.e. only land information is pertinent), so the non Land-Intersecting tiles are never created. In this case, a method called Indirect Indexing is employed (see Section 2.1.4).

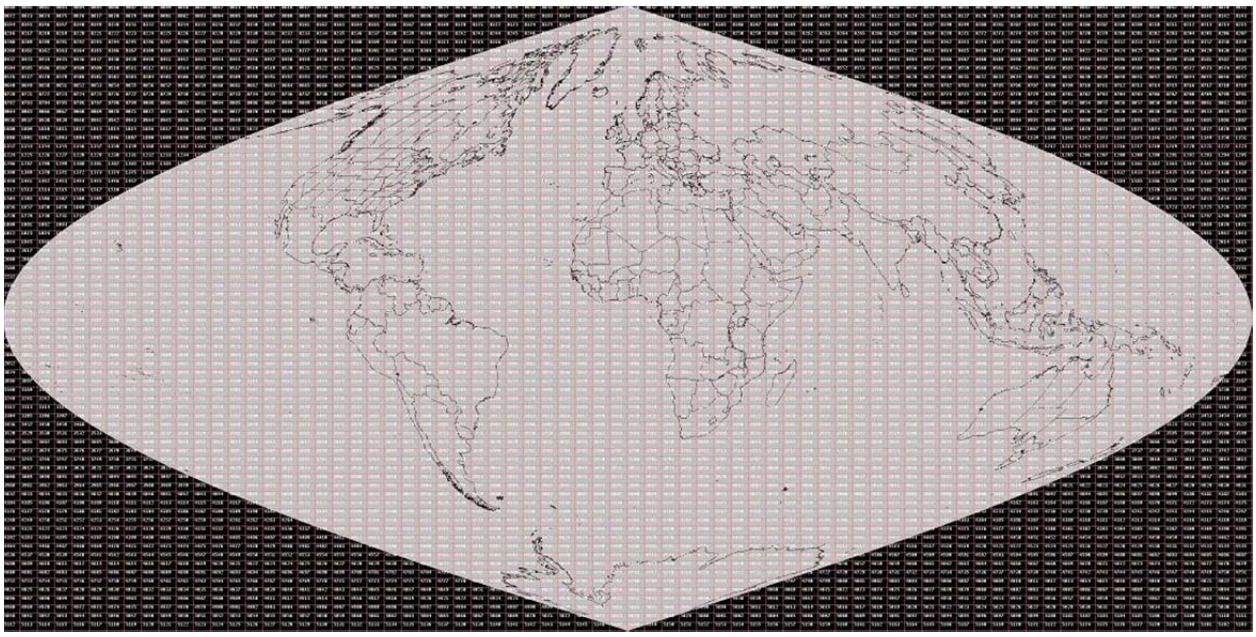

Figure 3. Tiled Sinusoidal Projection Map

The footprint of a 30-second VIIRS granule generally spans 10 to 15 tiles at low to mid latitudes. At high latitudes, the footprint can often span 15-25 tiles. Larger VIIRS granules generally span more tiles, but the relationship between size of the granule and the number of tiles spanned is not linear. See Figure 4 for an example of a VIIRS granule superimposed over a tiled grid. This is a screenshot from the Granule Viewer utility[2]. The upper pane shows the entire sinusoidal map with an outline of the granule being viewed. The blue box indicates the viewing area displayed in higher detail in the lower pane. The Processing SI only retrieves the relevant tiles[3] when executing a GridToGran or GranToGrid algorithm on the granule being shown.

[2] The Granule Viewer utility is a tool developed by the IDPS Processing team to view the location of a granule over the Earth, among other things.
[3] Determined by the Mapping IPs.

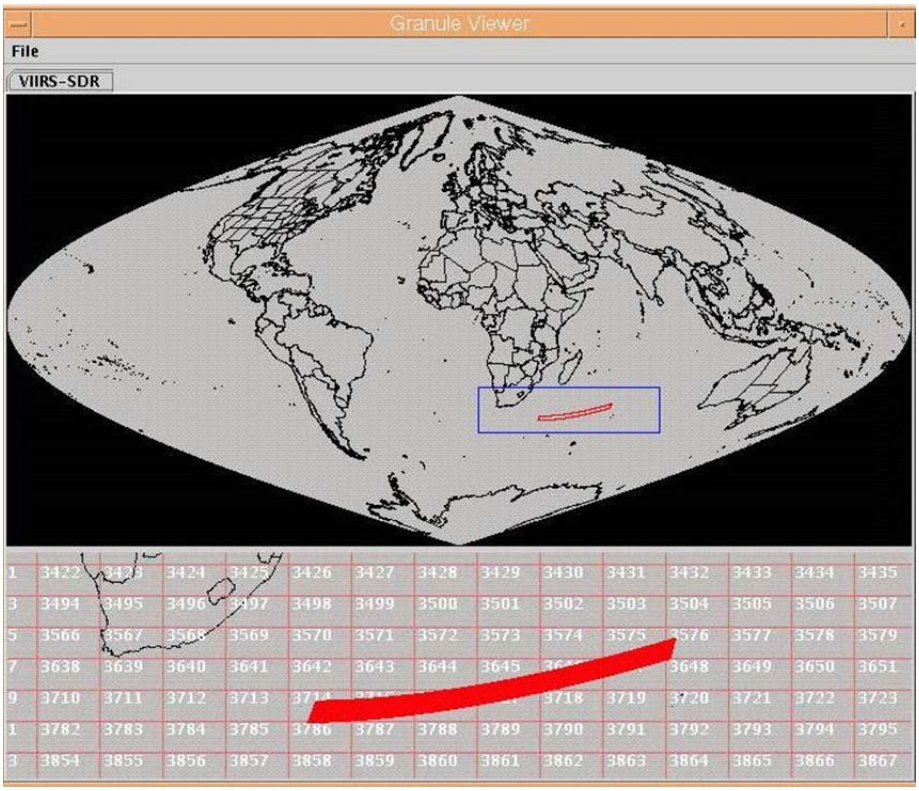

Figure 4. Granule Viewer

The Processing SI uses the ProCmnSinusoidalDataSet class to translate positions on the Earth's surface between latitude and longitude and sinusoidal grid cells. The ProCmnSinusoidalTileDatabase class can be used to convert from a global Earth grid cell to its equivalent Tile ID and offset (row, column) within that tile.

A reference sphere of 6371007.181 meters is assumed for the following conversions:

To find latitude and longitude from a grid row and column:

$$R_{earth} = reference_sphere_earth$$
$$\phi = latitude$$
$$\lambda = longitude$$
$$r = row$$
$$c = column$$
$$M_{per_row} = meters_per_row$$
$$M_{per_col} = meters_per_column$$
$$r_{ul} = upper_left_row$$
$$r_{ul} = R_{earth}\frac{\pi}{2}$$
$$c_{\lambda zero} = column_of_prime_meridian$$

$$\phi = \frac{r_{ul} - rM_{per_row}}{R_{earth}}$$
$$\lambda = \frac{(c - c_{\lambda zero})M_{per_col}}{R_{earth}\cos(\phi)}$$

To find grid row and column from latitude and longitude, the following is performed:

$$r_{sphere} = \phi R_{earth}$$
$$c_{sphere} = \lambda R_{earth}\cos(\phi)$$

$$r = \frac{r_{ul} - r_{sphere}}{M_{per_row}}$$
$$c = c_{\lambda zero} + \frac{c_{sphere}}{M_{per_col}}$$

Tiles are stored in the Data Management System (DMS) as individual Binary Large OBjects (BLOBs). GIP algorithms access tiles in DMS with the use of the ProCmnTileItem and ProCmnTileOutputItem classes as input and output, respectively. These classes provide a common, yet flexible interface to DMS.

2.1.2 Pixel-To-Cell Mapping

The pixel-to-cell mappings are an associative set of geographic coordinates (given by the Geolocation product(s) of the SDR algorithm) to the set of grid cells in the pixel. The latitude and longitude given by the Geolocation product(s) are the geodetic center of the pixel, while the size and shape of the pixels are sensor-specific. There is a need to map pixels to grid cells to support retrieval and storage operations on the GIPs. Unfortunately, there is not an exact one-

to-one mapping because: A.) The center point of every pixel does not fall exactly onto the center point of a grid cell, and B.) The shape and dimensions of the pixels and grid cells do not match.

2.1.2.1 VIIRS SDR

The VIIRS SDR algorithm creates two Geolocation products[4], Moderate (750m diameter / pixel at nadir) and Imagery (375m diameter / pixel at nadir), which indicate the geographic coordinate (latitude and longitude) for each pixel in a granule of data. Currently, a VIIRS granule is broken up into 48 scans of information[5] delivered from the satellite. A scan ranges approximately ±56° off nadir, yielding 3200 pixel columns for Moderate and 6400 pixel columns for Imagery. VIIRS Moderate uses 16 detectors per scan resulting in 768 pixel rows (16x48), while VIIRS Imagery uses 32 detectors per scan resulting in 1536 (32x48) pixel rows.

The VIIRS Geolocation latitude and longitude for a particular granule pixel is calculated from the center of the pixel. Similarly, the latitude and longitude for a particular Earth grid cell is calculated from the center of the cell. In fact, when we refer to a granule pixel or Earth grid cell, we are speaking to the center point for which there is a latitude and longitude value available. While it is true that pixels and grid cells span a certain area on the Earth (1km^2 for grid cells, and $\pi\left(\frac{750m}{2}\right)^2$ or $\pi\left(\frac{375m}{2}\right)^2$ for pixels at nadir – approximations), these boundaries are like imaginary lines to the software. For example, a pixel is often thought of as circular or oval in shape as it covers an area of the Earth, however the Geolocation does not provide the dimensions of this shape as it changes across and along scans; it does provide the latitude and longitude of the center.

The VIIRS Gridding/Granulation software uses three different methods of Pixel-To-Cell mapping: 1.) Nearest Neighbor (NN), 2.) Area Weight (AW), and 3.) Greatest Weight Neighbor (GWN) in deciding which method should be applied for a particular GIP algorithm, the trade-off of accuracy vs. latency has to be considered. For example, NN is very fast in terms of execution, while GWN is much slower than NN, and AW is even slower than GWN. However, AW is expected to be the most accurate, with GWN being less accurate than AW, and NN being the least accurate.

NN is a method of Pixel-To-Cell mapping whereby the single closest (nearest) match is selected. The AW Pixel-To-Cell mapping identifies the set of all matches that intersect the defined region (pixel or grid cell). GWN selects the single greatest weighted match (according to the AW calculation). For more details on these algorithms, see Section 2.1.3.

2.1.2.2 OMPS TC SDR

The OMPS TC SDR creates a single Geolocation product. An OMPS TC pixel is about 50Km at nadir. Currently an OMPS TC granule consists of 5 scans, each of 35 columns. A scan ranges approximately ±53° off nadir, for a scan width of about 2800Km.

Like the VIIRS Geolocation, the OMPS Geolocation latitude and longitude for a particular pixel is calculated from the center of the pixel. In the software, OMPS pixels are thought of as rectangles with slightly rounded corners.

[4] VIIRS Geolocation actually creates more than two products, but this document is only concerned with Moderate and Imagery (terrain corrected).
[5] A VIIRS granule is approximately 30 seconds of data.

Check the JPSS MIS Server at https://jpssmis.gsfc.nasa.gov/frontmenu_dsp.cfm to verify that this is the correct version prior to use

The OMPS Gridding/Granulation software uses a single method of Pixel-To-Cell mapping: the OMPS Mapping IP.

2.1.2.3 CrIS SDR

The CrIS SDR creates a single Geolocation product. A CrIS SDR pixel is approximately a 15km-diameter circle at nadir, but may be much larger for off-nadir pixels due to Earth's curvature. In fact, off-nadir pixels are ellipses with the major axis on the along-scan track of the CrIS instrument. The elliptical representations of CrIS pixels are closely approximated with the following set of equations:

$$\delta = 0.93 rad$$
$$\delta_R = \delta \bullet \cos(\phi)$$
$$\delta_P = \delta \bullet \sin(\phi)$$
$$R_{BPT} = R_{FOV} + \delta_R$$
$$P_{BPT} = P_{FOV} + \delta_P \text{ ,}$$

Where:

δ is the approximate half-width of the cone that intersects the earth;
ϕ is the incremental angle about the ellipse, from the range 0 to 2π;
δ_R is the incremental roll angle;
δ_P is the incremental pitch angle;
R_{FOV} is the center roll angle;
P_{FOV} is the center pitch angle;
R_{BPT} is the resultant roll angle of each point along the boundary of the ellipse;
and P_{BPT} is the resultant pitch angle of each point along the boundary of the ellipse.

The roll and pitch angle boundary points are then converted to an exit vector and the common geolocation ellipIntersect() function (refer to D41869, Operational Algorithm Description Document for Common Geolocation) is called to retrieve the latitudes and longitudes of each boundary point about the ellipse.

The CrIS pixel-to-grid-cell mapping associates the latitudes and longitudes from the CrIS Geolocation product with the grid cells encompassed by the boundary points of the pixel.

2.1.3 Mapping IPs

When executing GridToGran or GranToGrid algorithms, it is necessary for the algorithm to have knowledge of which pixels in a granule correspond to which grid cells on the Earth. A mapping IP contains this knowledge in the form of a mapping between a row, column, and tile ID to a pixel in the granule-space, or vice-versa. The mapping IP also contains an exhaustive list of tile IDs to aid an algorithm in retrieving all necessary tiles from DMS at one point in time (in the IPO model pattern). Rather than perform redundant calculations for a given granule during each algorithm, mapping IPs are generated once, up front. The following subsections discuss the various forms of mapping IPs.

2.1.3.1 VIIRS Nearest Neighbor IP

The Nearest Neighbor IP uses double precision floating point values to represent a row and column. These values are calculated from the latitude and longitude of the center of each pixel. These values are then truncated to the nearest integer. The end result is the grid cell whose center is *nearest* that of the pixel being processed.

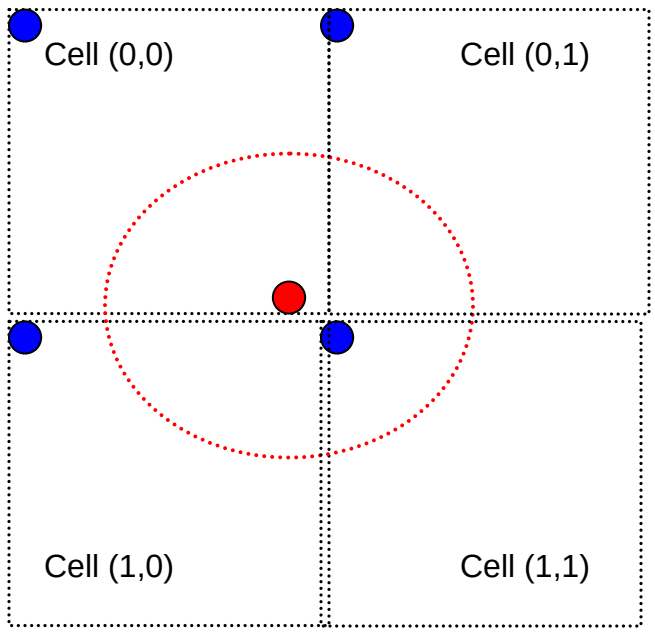

Figure 5. Nearest Neighbor Mapping

In Figure 5, notice four grid cells [(0,0),…,(1,1)]. The red dotted ellipse indicates an example pixel whose center is denoted with a red point. The result of the row calculation could be 0.95. When truncated, it is determined to be *nearest* r_{zero}. Similarly, the column calculation could be 0.85. This would also be truncated down and would indicate that the center of this pixel is *nearest* c_{zero}. r_{zero} and c_{zero} will result in a Pixel-To-Cell mapping to Cell (0,0).

The Nearest Neighbor IP algorithm is implemented as a class template, allowing the exact same code to be used for either Moderate or Imagery VIIRS Geolocation. In fact, based on the template parameters provided, the C++ compiler generates and compiles the correct code as needed[6]. Typedefs have been provided for Moderate and Imagery to ease readability and reduce the possibility of errors: ProGipViirsNNMod and ProGipViirsNNImg.

[6] A class template is not actually 'source code' in the strictest sense. A C++ template is like a blue print, or instructions, for the compiler to follow in order to write the actual source code for you. After the source code is generated, that source code is then compiled. Everything with templates is done at compile time, so there should be no performance penalty. The C++ Standard definition of templates allows for their use to be just as efficient as a hand-coded implementation. However, the bonus here is that we write, test, and maintain one piece of code instead of two.

2.1.3.2 VIIRS Area Weight Calculator IP

The VIIRS Area Weight Calculator (WCalc) produces two products. The first product is the Gran product. For each pixel in the granule, it contains a list of grid cells (up to a maximum) which contribute to the pixel. This list contains the grid cell's row, column, tile ID, and weight (percentage of the grid cell that the pixel covers). The second product is the Grid product. This product covers the same area of the earth, but is structured in such a way that it is a list of contributing pixels rather than a two-dimensional array of grid cells. For each of these grid cells, it contains a list of pixels (up to a maximum) which contribute to the cell. This list contains the pixel's row, column, and weight (percentage of the pixel that the grid cell covers). The weights stored in the output products are scaled in order to save disk space. Figure 6 shows the interrelationship between the WCalc algorithms and their inputs and outputs.

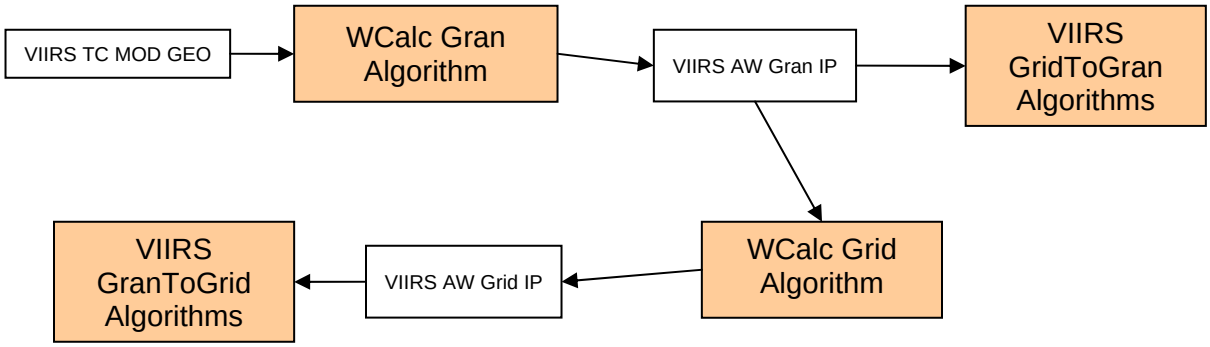

Figure 6. WCalc Interrelationships Diagram

2.1.3.2.1 Pixel Shape and Smearing

WCalc assumes each pixel is rectangular in shape and, at any instant, corresponds to a very nearly rectangular shape on the earth. Ideally each would have a uniform response and perfectly sharp edges as shown in Figure 7(a). Imperfections in the optics and other factors cause it to deviate slightly. However, because the detectors integrate while they are moving, each pixel represents a non-uniform weighting of the area it covers, shown in Figure 7(b). The triangular shape is due to the "motion blur." If the detectors were not moving, the pixel would have the simpler uniform shape shown in Figure 7(a).

This is further complicated by the fact that the satellite aggregates multiple pixels into a single pixel prior to sending the data to the ground. The overall effect of this is to change the pixel shape to a trapezoid, as shown in Figure 7(c).

Because the processing routines and the volume calculation routine can only work with pixels that have a linear weight function, each pixel is potentially divided into multiple segments, each of which has a linear response shape. Figure 7(d) shows the subdivision of Figure 7(c).

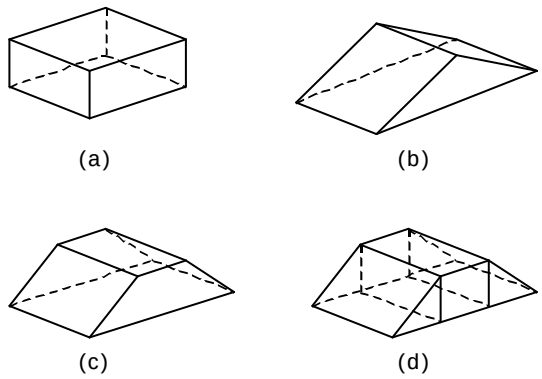

(a) an ideal pixel, (b) a pixel displaced its entire width during its integration time, (c) a pixel "smeared" less than its width, or multiple pixels added together, and (d) subdivisions of the pixel such that each segment has a linear weight function

Figure 7. Pixel Response Functions

In the WCalc code, the latitudes and longitudes of each of the four corners of the ideal pixel of Figure 7(a) are stored in the 'verts4' array. The latitudes, longitudes, and weights of the eight vertices of the subdivided pixel of Figure 7(d) are stored in the 'verts8' array.

The amount of smear can be described by the ratio of the motion to the pixel size. No motion would generate the pixel shape shown in Figure 7(a), while motion equal to 100% of the pixel size would create the pixel shape shown Figure 7(b). The pixel shown in Figure 7(c) would correspond to something in between. The "smear factor" in the WCalc code is a number from 0 to 1 which represents this quantity. It is contained in the WCalc Gran algorithm's configuration guide.

Note that since the aggregation changes during the scan, so does the smear factor. At 1:1 aggregation (no aggregation) the smear factor is 1. At 2:1 aggregation, the smear factor is 1/2. At 3:1 aggregation, the smear factor is 1/3.

2.1.3.2.2 Pixel Corners and Intersections

In order for WCalc to compute pixel/grid cell intersections (and corresponding weights), the pixel and grid cells need to be represented as polygons. The grid cells are implicitly rectangular polygons, given the grid definition. A pixel, however, is merely represented as a single discrete point (the center of the pixel) via the geolocation. We derive the pixel polygon by computing the four corners of the pixel (assumes a quadrilateral pixel shape).

In calculating the pixel corners, the WCalc algorithm attempts to consult the eight neighboring pixels. For each pixel corner, WCalc either interpolates or extrapolates the corner latitude and longitude, depending on various conditions. Interpolation occurs in all cases except the following: across scan boundary, across aggregation zone boundary, and when the pixels required for interpolation are FILL.

Once the pixel corners are known, they must be converted from latitude and longitude to grid coordinates. At this point, we have a pixel polygon in grid coordinates, and we have grid cell polygons in grid coordinates. WCalc can now compute the polygon intersections. First, the

pixel polygon[7] is divided into sections along horizontal grid cell boundaries. Next, these slices are further divided into sections along vertical grid cell boundaries. Then, each of these resulting polygons is added into a list of grid cells. The weight associated with each polygon is calculated according to a volume weighting formula. This takes into account the pixel shape per the smear factor. Finally, this list of grid cells is merged into a final list of grid cells by removing duplicate polygons such that no two polygons refer to the same grid cell. In the case of duplicate polygons, all duplicates are merged into one such that the weight is a summation of each contributing polygon.

2.1.3.2.3 Pole Scenario

The mechanics for computing the overlap between pixels and grid cells breaks down when very close to the pole. It is difficult to compute pixel corner positions given the latitude and longitude of each pixel center. When the latitudes and longitudes of the corners are converted into grid coordinates, the polygons can either intersect themselves or be non-convex. These malformed pixels give erroneous results and increase the risk of software crashes due to code operating out of its design bounds.

Fortunately, these problems only occur extremely close to the pole. A distance of several pixels should be sufficient to avoid these badly malformed pixels.

For pixels whose centers lie within five km of either pole, a simpler weight estimation method is used. Each pixel is given a weight of one corresponding to the grid cell that contains the pixel's center (Nearest Neighbor method). Depending upon how the pixels fall, the grid cells near the pole may have zero, one, or more than one pixels "covering" it.

2.1.3.2.4 WCalc Grid Product

The WCalc Grid product is computed using the WCalc Gran product by performing a reverse mapping of the data. The WCalc Gran product provides a list of contributing grid cells per pixel, whereas the WCalc Grid product provides a list of contributing pixels per grid cell. There is no scientific calculation in this part of the WCalc algorithm. It is merely a rearranging of the data in such a way that the consuming algorithms can use it more efficiently. Note that the weight associated with a pixel to grid cell mapping in the WCalc Gran product is the same weight used in the WCalc Grid product for a grid cell to pixel mapping when the same grid cell and pixel are referenced.

2.1.3.3 OMPS Mapping IPs

There are two versions of the OMPS mapping IP. There is a version for OMPS TC and a version for OMPS NP. They are very similar, with the only difference being the number of pixels for which lists of contributing grid cells are created.

The OMPS Mapping IP contains information regarding which grid cells contribute to an OMPS pixel. For each OMPS pixel, the mapping IP lists every grid cell which contributes to that pixel. The mapping IP does not calculate the weight of a grid cell.

[7] Depending on the pixel smear factor, the pixel may have first been divided into up to three separate polygons as described in the Pixel Shape and Smearing section. Each of these polygons will be further subdivided horizontally and vertically, potentially resulting in duplicate polygons.

Check the JPSS MIS Server at https://jpssmis.gsfc.nasa.gov/frontmenu_dsp.cfm to verify that this is the correct version prior to use

The OMPS Mapping IP is used during OMPS GridToGran processing to map information from the grid to an OMPS pixel. Unlike VIIRS, there is no GranToGrid processing for OMPS, and therefore a mapping IP for use during GranToGrid is not created.

2.1.3.4 CrIS Mapping IP

Like the OMPS Mapping IPs, CrIS creates a single mapping IP for Grid-to-Gran processing. It is used to map information from the grid to a CrIS pixel using similar means as the OMPS Mapping IPs. The only difference between the OMPS Mapping IPs and the CrIS Mapping IP are the geometries of their respective pixels, which are described in Sections 2.1.2.2 and 2.1.2.3, respectively. In essence, the OMPS Mapping IPs and the CrIS Mapping IP will most certainly be populated with a different set of grid cells over the same center latitude and longitude of a given pixel.

2.1.4 Indirect Indexing

The purpose of indirect indexing is to incorporate changes to the way that data is stored within DMS, so that only tiles of interest are stored in the database. Indirect-indexed GIP algorithms use only those tiles that contain land areas and within those tiles only the grid cells that contain land are stored. Tiles that are all water are not created. As part of retrieving the required inputs PRO queries for the needed GIP tiles. For indirect-indexed tiles PRO first retrieves the MLI (Master Land Index) tiles that map to the granule (based on information stored in the mapping IP). PRO first looks at the MLI tile for the number of land cells. If zero land cells (all-ocean) are present PRO does not attempt to retrieve that particular data tile. PRO then retrieves the data tiles that have land cells in them. The GIPs that are referenced by indirect indexing are not regular gridded tile / cell constructs. For each tile, they consist of static data (for some GIPs) followed by a single-dimension vector of GIP data cells. The MLI, a tile with regular rows and columns, contains offsets into the indirect-indexed GIP's 1-dimesional array that stores the land cell data. The tile interface then uses those offsets retrieved from the appropriate MLI cells to read the actual GIP data cell from the vector of data in the indirect-indexed GIP tile. There are MLI tiles for each tile ID. The MLI is created from the QST-LWM product for values 1-16 which are land and 20 which is unclassified land. The MLI is created and maintained by the Internal Support Functions (ISF). See Figure 8 for an indirect indexing example.

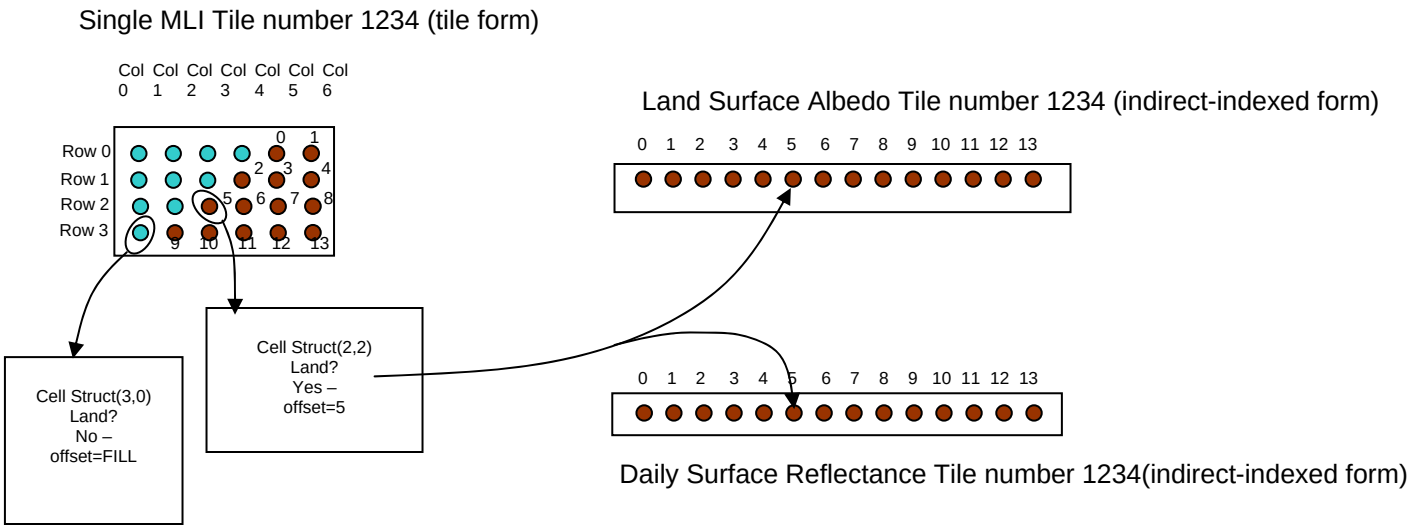

Figure 8. Indirect Indexing Example

2.1.5 Tile Interfaces

GIP algorithms need to access tiles. Tile Interface classes are introduced to provide a single approach to getting and setting data values in a GIP. Because of the data structure techniques that are deployed, a level of abstraction simplifies the code needed to get or set a value from within a GIP algorithm. Having a single point of contact also eases the scope of change required when implementing other potential performance or storage enhancements.

A Tile Interface class encapsulates all of the tiles required for processing. With granule-based processing (GridToGran & GranToGrid), all of the tiles determined to be required by the mapping IP are loaded into the Tile Interface. This allows the GridToGran or GranToGrid algorithm to query the Tile Interface using any particular Tile ID and offset within that tile[8]. Any necessary special processing[9] or error checking[10] is internal to the Tile Interface class, leaving the algorithm to focus on its primary tasks.

2.1.6 GIP Exclusions

GIP Exclusions incorporates changes to the processing of the GranToGrid algorithms when the criteria for an exclusion is met, the tiles are not updated, otherwise, the tiles are updated as normal processing. In the case of a GIP Exclusion, the output item is created as a copy of the original data item and is not updated during processing. There are three types of exclusions that are processed within the GranToGrid algorithms.

---

[8] Offset is typically a row and a column in the tile, but in some cases, additional dimensions may be specified as needed.
[9] An example is scaling/unscaling.
[10] An example of error checking is returning a default value in the absence of data. If the Tile ID requested has not been loaded into the interface (because of Indirect Indexing or Latitude Exclusion), or if the tile pointer is valid but the requested (row,column) is not valid (because of Indirect Indexing), then a default value for that particular field is returned.

The first is Graceful Degradation, when the configuration value (AllowGracefulDegradation) is set to “False”; the algorithm checks the metadata to see if graceful degradation has affected the data values. When the metadata value is “Yes”, then normal processing is interrupted and the algorithm returns without updating the tiles.

The second is Spacecraft Maneuvers, when the configuration value (AllowSpacecraftManeuvers) is set to “False”, the algorithm checks the metadata to see if spacecraft maneuvers have affected the data values. When the metadata value is not “Normal Operations”, then normal processing is interrupted and the algorithm returns without updating the tiles.

The third is for Repair Data, the algorithm checks the metadata to see if granule version starts with a value of “A1”. When the metadata value is not “A1”, then normal processing is interrupted and the algorithm returns without updating the tiles.

The following are examples of the update status messages used when processing GranToGrid Update Messages.

```
01/07 21:49:45.415623 ProGipViirsGranToGridMonthlySRBTVI.exe(307410.1): DBG_HIGH
InfTk_ServiceModule.cpp|597|Status Type:INF_STATUSTYPE_GRANGRID_GRID,Timestamp:2008-01-07
21:49:45.415447Z,ID1:NPP001212024114,ID2:A1,Name1:NPP,Name2:VIIRS,Name3:GridIP-VIIRS-GranToGrid-
Monthly,Quality:-1,Severity:INF_SEVERITYLEVEL_NORMAL,Logging Level:INF_LOGLEVEL_INFO,Display
Flag:INF_DISPLAYFLAG_NORMAL,Description:GridIP-Tile, GIP Tiles not Updated, Graceful Degradation
GIP Exclusion Utilized, Tile IDs that are included in this granule:
617,618,619,620,689,690,691,692,693,760,761,762,763,764,765,832,833,834,904,905,906,977,978,Proce
ss WID:0,Subject WID:0

01/07 21:49:45.415623 ProGipViirsGranToGridMonthlySRBTVI.exe(307410.1): DBG_HIGH
InfTk_ServiceModule.cpp|597|Status Type:INF_STATUSTYPE_GRANGRID_GRID,Timestamp:2008-01-07
21:49:45.415447Z,ID1:NPP001212024114,ID2:A1,Name1:NPP,Name2:VIIRS,Name3:GridIP-VIIRS-GranToGrid-
Monthly,Quality:-1,Severity:INF_SEVERITYLEVEL_NORMAL,Logging Level:INF_LOGLEVEL_INFO,Display
Flag:INF_DISPLAYFLAG_NORMAL,Description:GridIP-Tile, GIP Tiles not Updated, Spacecraft Maneuvers
GIP Exclusion Utilized, Tile IDs that are included in this granule:
617,618,619,620,689,690,691,692,693,760,761,762,763,764,765,832,833,834,904,905,906,977,978,Proce
ss WID:0,Subject WID:0

01/07 21:49:45.415623 ProGipViirsGranToGridMonthlySRBTVI.exe(307410.1): DBG_HIGH
InfTk_ServiceModule.cpp|597|Status Type:INF_STATUSTYPE_GRANGRID_GRID,Timestamp:2008-01-07
21:49:45.415447Z,ID1:NPP001212024114,ID2:A1,Name1:NPP,Name2:VIIRS,Name3:GridIP-VIIRS-GranToGrid-
Monthly,Quality:-1,Severity:INF_SEVERITYLEVEL_NORMAL,Logging Level:INF_LOGLEVEL_INFO,Display
Flag:INF_DISPLAYFLAG_NORMAL,Description:GridIP-Tile, GIP Tiles not Updated, Repair Data GIP
Exclusion Utilized, Tile IDs that are included in this granule:
617,618,619,620,689,690,691,692,693,760,761,762,763,764,765,832,833,834,904,905,906,977,978,Proce
ss WID:0,Subject WID:0

01/07 21:49:45.415623 ProGipViirsGranToGridMonthlySRBTVI.exe(307410.1): DBG_HIGH
InfTk_ServiceModule.cpp|597|Status Type:INF_STATUSTYPE_GRANGRID_GRID,Timestamp:2008-01-07
21:49:45.415447Z,ID1:NPP001212024114,ID2:A1,Name1:NPP,Name2:VIIRS,Name3:GridIP-VIIRS-GranToGrid-
Monthly,Quality:-1,Severity:INF_SEVERITYLEVEL_NORMAL,Logging Level:INF_LOGLEVEL_INFO,Display
Flag:INF_DISPLAYFLAG_NORMAL,Description:GridIP-Tile, GIP Tiles Updated, Tile IDs that are
included in this granule:
617,618,619,620,689,690,691,692,693,760,761,762,763,764,765,832,833,834,904,905,906,977,978,Proce
ss WID:0,Subject WID:0
```

2.1.7 GridToGran

During granule processing, if algorithms need to use a GIP as input, the portions of the GIP applicable to the Granule are extracted into a separate granule product. PRO performs the GridToGran granulation as part of the Granule processing. The default is to do this during SDR processing, but it can also be done during EDR/IP processing or as a separate, standalone process depending upon the GIP’s use within the processing chain. The granulation processing is performed for each granule processed.

Each GridToGran algorithm has two types of inputs and one output. The output is the granulated product. The inputs are a Pixel-To-Cell Mapping IP and GIP Tiles.

All seven GridToGran algorithms follow the same general architecture in the processing phase. The general behavior is described here; see individual algorithm sections for specific behavior. The GridToGran algorithms employ different methods of determining the best cell to use when granulating each field. For the Nearest Neighbor IP, the Nearest Neighbor method is used. For the Area Weight IP, the algorithms use either the Greatest Weight Neighbor method or the Area Weighting (weighted average) method.

2.1.7.1 doProcessing()

In addition to the standard PRO doProcessing() setup logic, such as assigning input pointers, etc., each of the GridToGran algorithms follows this basic pattern:

```
calculate number of rows to process
loop over rows
      loop over columns
            get mapping IP info for pixel[row][col]
            granulate pixel value according to mapping IP info
      end loop
end loop
```

2.1.8 GranToGrid

Certain EDR/IP granule products are used to update the GIPs (rolling updates or periodic). After the data products are created for each granule, INF Workflow Manager (WFM) tasks a persistent PRO process to update the GIP with the data products. PRO creates a separate, single persistent process for each GranToGrid algorithm. One GranToGrid algorithm could update multiple GIPs. It is important that there only be one instance of a GranToGrid algorithm. To protect the integrity of the data in the GIPs, only one writer is allowed.

Each GranToGrid algorithm has at least two types of inputs and one type of output. The output is one or more different sets of GIP Tiles. The inputs are a Pixel-To-Cell Mapping IP and some number of EDR/IP and/or SDR granule products.

Some GranToGrid algorithms perform a reversal of the appropriate Pixel-To-Cell Mapping IP so that information on all the pixels that intersect a particular grid cell can be organized. This allows for GranToGrid algorithms to exclusively loop over only relevant grid cells and perform appropriate scientific logic on all the related pixels at one time. Other GranToGrid algorithms use another Cell-To-Pixel Mapping in the form of Area Weight.

All four GranToGrid algorithms follow the same general architecture in the processing phase. The general behavior is described here; see individual algorithm sections for specific behavior. A GranToGrid base class handles common functionality for these algorithms, such as maintaining a list of grid cells from the mapping IP and providing a way of iterating over and retrieving those grid cells. Depending on the type of mapping IP, the derived algorithm may have to perform a reversal of the mapping in order to get this list of grid cells. Within the GranToGrid algorithms there is the possibility of GIP Exclusions (Section 2.1.6) that would affect the updating of the tiles.

2.1.8.1 doProcessing()

In addition to the standard PRO doProcessing() setup logic, such as assigning input pointers, etc., each of the GranToGrid algorithms follows this basic pattern:

```
if Gip Exclusions exist then
      return “success” without updating tiles
      // An Exclusion is not a failure, tiles are just not updated
end if
if mapping IP is NN IP then
      perform reversal
end if
determine number of grid cells to process
loop over grid cells
      get current grid cell information
      call calculateXXX() algorithm-specific function
      advance grid cell
end loop
```

2.1.8.2 calculateXXX()

Each GranToGrid algorithm has a calculateXXX() method where XXX is the algorithm-specific name. This method contains the science logic for updating the grid. The individual algorithm sections contain specific details. The following pattern is employed:

```
if mapping IP is AW Grid IP then
      call xxx_aggregate()
      if xxx_aggregate() success then
            call xxx_composite()
      end if
else
      perform compositing logic
end if
```

2.1.8.3 fillTileInterface()

Each mapping IP contains the list of required tiles in order to process the tasked granule. This method uses that tile list to populate the algorithm’s tile interface.

2.1.9 GridToGrid

Occasionally there is a need to perform GridToGrid processing wherein an algorithm creates, updates, or initializes a GIP from one or many other GIPs. GridToGrid processing is primarily schedule based (i.e. daily, monthly, quarterly, etc.) and is performed by transient PRO processes initiated by INF WFM based on an entry in the IDP schedule. The capability exists to perform the entire update at one time or via multiple sequential executions based on Tile IDs.

Each GridToGrid algorithm has at least one type of input and one type of output. The output is one or more different sets of GIP Tiles. The inputs are one or more different sets of GIP Tiles and, optionally, Look Up Tables (LUTs).

Post Composite Data Reduction deserves special mention since it is a specific application of GridToGrid processing. Certain GIPs perform compositing during the GranToGrid update operations. The particular compositing method may require that multiple values be retained until the end of the compositing period (e.g. month), at which point a ‘best’ value is selected. A GridToGrid algorithm performs this Post Composite Data Reduction operation to determine the ‘best’ from multiple observations, and stores that ‘best’ observation in the ‘final’ GIP.

Check the JPSS MIS Server at https://jpssmis.gsfc.nasa.gov/frontmenu_dsp.cfm to verify that this is the correct version prior to use

Some GIPs need to be initialized prior to the start of a new period. This is accomplished through the use of GridToGrid initialization processes. Template tiles are copied to initialize a new periodic GIP, ensuring availability for GranToGrid processing within a new period.

All seven GridToGrid algorithms follow the same general architecture in the processing phase. The general behavior is described here; see individual algorithm sections for specific behavior. Most of the commonality between the GridToGrid algorithms is related to tasking information because these algorithms are run one tile at a time, via a dispatcher, over various tile ranges.

2.1.9.1 doProcessing()

In addition to the standard PRO doProcessing() setup logic, such as assigning input pointers, etc., each of the GridToGrid algorithms follows this basic pattern:

```
populate tile interface
loop over grid cell rows
      loop over grid cell columns
            apply science logic using input grid cells
            update output grid cell(s) if needed
      end loop
end loop
```

2.1.10 VIIRS GridToGran Controller

The VIIRS GridToGran Controller was developed to satisfy requirements of granulating GIPs at different points in the algorithm chain. The Controller allows GridToGran algorithms to be run independently of the VIIRS SDR process and of each other based on configuration guides. GIP granulation can only be performed using the GridToGran Controller. While each individual GridToGran algorithm is its own algorithm, it has been designed such that it must be run as part of the GridToGran Controller.

2.1.10.1 Execution Point

The VIIRS GridToGran Controller has been developed such that it can be executed out of the VIIRS SDR process, an EDR process, or as a stand alone process. The VIIRS GridToGran Controller is instantiated based on information in configuration guides. The execution point is in reference to where the controller is running.

2.1.11 VIIRS GridToGrid Dispatchers

WFM tasks each GridToGrid process with a range of tile IDs, expecting that the process performs the GridToGrid task on each of the tiles within that range. The specific GridToGrid algorithms only process one tile at a time. To bridge this gap, we introduce the concept of a GridToGrid dispatcher.

The GridToGrid dispatcher is generic in nature, borrowing the majority of its functionality from the ProCmnControllerAlgorithm, which allows sub-algorithms to be executed based on configuration guide entries. The sub-algorithms are the specific GridToGrid algorithms, and they handle their own I/O. Each dispatcher loads one input, an Earth Land LUT, to determine which tiles in the range are valid for processing.

For example, the Monthly SR/BT/VI Post-Composite Data Reduction process consists of a dispatcher that executes a GridToGrid post-comp algorithm (per config guide) once for every tile ID in the tasked range. However, the dispatcher only runs the post-comp algorithm on tile IDs

Check the JPSS MIS Server at https://jpssmis.gsfc.nasa.gov/frontmenu_dsp.cfm to verify that this is the correct version prior to use

determined to be Earth-intersecting per the Earth Land LUT. The post-comp algorithm actually creates and releases its output tile to DMS for each tile ID with which it is tasked.

2.1.12 Gridded IP Tables

Table 3. GIP Algorithm Summary

GIP	GridToGran	GranToGrid	GridToGrid
Snow Ice Cover	GWN	NN	n/a
Quarterly Surface Type	GWN	n/a	Delivered to IDPS, Once every 3 months[11]
Ann Max/Min NDVI	GWN	n/a	Delivered to IDPS, Once every 3 months[12]
Land Surface Albedo	AW[13]	n/a	Once every 17 days
QST-LWM	GWN	n/a	Delivered to IDPS, Once every 3 months[14]
Daily Surface Reflectance	n/a	AW	n/a
Monthly SR/BT/VI	n/a	AW	Post Composite Data Reduction, Once a month
BRDF Archetypal	n/a	n/a	Once every 17 days
NBAR-NDVI Rolling	GWN	n/a	Once every 17 days
NBAR-NDVI Monthly	n/a	n/a	Once a month[15]
NBAR-NDVI 17 Day	n/a	n/a	Once every 17 days

A summary of the algorithms performed on each of the ten GIPs, along with a brief description of each algorithm is presented in Table 3. An “n/a” cell indicates that particular type of algorithm is not performed on that GIP. For example, the “n/a” cell in the GridToGran column and the Monthly SR/BT/VI row indicates that a granulated product is not created from the Monthly SR/BT/VI GIP. The GridToGran and GranToGrid columns specify the Pixel-To-Cell Mapping method employed by the respective algorithms per GIP. The GridToGrid column details the purpose of the operation and identifies how often the algorithm should be executed.

Table 4. GIP Sizes

GIP	Bytes per Cell	Land/ Earth	Indexing	# of Tiles	# of Cells
Snow Ice Cover	10	Earth	Non-Indexed	3436	618,480,000
Quarterly Surface Type	3	Earth	Non-Indexed	3436	618,480,000
Ann Max/Min NDVI	6	Land	Indirect Indexed	1661	167,679,146
Land Surface Albedo	340	Land	Indirect Indexed	1661	167,679,146
QST-LWM	1	Earth	Non-Indexed	3436	618,480,000
Daily Surface Reflectance	30*T + 1[16]	Land	Indirect Indexed	1661	167,679,146
Monthly SR/BT/VI	64	Land	Indirect Indexed	1661	167,679,146
Monthly SR/BT/VI Final	32	Land	Indirect Indexed	1661	167,679,146
BRDF Archetypal	200	Land	Indirect Indexed	1661	167,679,146
NBAR-NDVI 17 Day	2	Land[17]	Indirect Indexed	1661	6,975,856
NBAR-NDVI Rolling	4	Land[18]	Indirect Indexed	1661	6,975,856
NBAR-NDVI Monthly	2	Land[19]	Indirect Indexed	1661	6,975,856

[11] Quarterly (every 3 months) product, but may be delivered less often. This product is created outside of the operational system and delivered to the DPEs similar to a static ancillary update (i.e. as a software update).
[12] Quarterly (3 months) product, but may be delivered much less often. This product is created outside of the operational system and delivered to us.
[13] Only continuous (floating point) fields are weighted average, all others are greatest weight.
[14] Quarterly (3 months) product, but may be delivered much less often. This product is created outside of the operational system and delivered to us.
[15] This algorithm is tasked once every 17 days, but only runs once every month.

[16] Where ‘T’ is the maximum number of observations per cell. ‘T’ is a function of latitude.
[17] 5km offsets of the MLI (Master Land Index)
[18] 5km offsets of the MLI (Master Land Index)
[19] 5km offsets of the MLI (Master Land Index)

The GIP Sizes table, Table 4, describes several features of each GIP that help to determine its overall size. Some GIPs store information pertaining to the entire Earth, while others are only concerned with Land (ignoring water); this information is represented in the Land/Earth column.

Table 5. GridToGran Consumers

Granulated GIP	Consumer
Snow Ice Cover	VIIRS Cloud Mask IP
Quarterly Surface Type	VIIRS Surface Type EDR VIIRS Land Surface Temperature EDR[20]
Ann Max/Min NDVI	VIIRS Surface Type EDR
Land Surface Albedo	VIIRS Land Surface Albedo IP
QST-LWM	VIIRS Cloud Mask IP VIIRS Fire Mask IP
NBAR-NDVI	VIIRS Cloud Mask IP

The VIIRS GridToGran Consumers table, Table 5, lists each of the GIPs that are granulated via a VIIRS GridToGran algorithm and, for each Granulated GIP, all of the respective consumers. The Granulated Quarterly Surface Type-Land Water Mask GIP is consumed by VIIRS Cloud Mask IP and VIIRS Fire Mask IP. In this sense, to be 'consumed' means that product is an input to the algorithm. Therefore, Granulated QST-LWM is an input to (consumed by) the VIIRS Cloud Mask IP.

Table 6. OMPS GIP Algorithm Summary

GIP	GridToGran
Snow Ice Cover	OMPS Mapping IP
Quarterly Surface Type	OMPS Mapping IP

Table 7. OMPS GridToGran Consumers

Granulated GIP	Consumer
Snow Ice Cover	OMPS TC First Guess IP
Quarterly Surface Type	OMPS TC GridToGran Sun Glint

Table 6 shows the OMPS GIP Algorithm Summary. The OMPS GridToGran Consumers table, Table 7 lists each of the GIPs that are granulated via an OMPS GridToGran algorithm and, for each Granulated GIP, all of the respective consumers. The Snow Ice Cover GIP is granulated and used to produce a snow ice fraction. This snow ice fraction is used by the algorithms listed in the consumer column of the table. The Quarterly Surface Type GIP is granulated and used to set the sun glint flag in the OMPS TC SDR.

Table 8. CrIS GIP Algorithm Summary

GIP	GridToGran
Quarterly Surface Type	CrIS Mapping IP

[20] Graceful Degradation – primary is Surface Type EDR

Table 9. CrIS GridToGran Consumers

Granulated GIP	Consumer
Quarterly Surface Type	CrIS GIP Land Fraction

Tables 8 and 9 show the CrIS GIP Algorithm Summary and CrIS GridToGran Consumers. The Quarterly Surface Type GIP is granulated and used to produce a land fraction. The land fraction used by the CrIMSS EDR.

2.1.13 Graceful Degradation

2.1.13.1 Graceful Degradation Inputs

There is one case where input graceful degradation is indicated in the GridToGran.

1. An input retrieved for the algorithm had its N_Graceful_Degradation metadata field set to YES (propagation).

2.1.13.2 Graceful Degradation Processing

None.

2.1.13.3 Graceful Degradation Outputs

None.

2.1.14 Exception Handling

The GIP algorithms inherit the Processing (PRO) Common error handling strategy of removing output products when an error path is encountered. This error condition is handled at the level encountered and then the failure condition is forwarded to the calling program. A controller algorithm then removes any output products that it has, and the error condition continues to propagate up in the case of nested controllers.

2.1.15 Data Quality Monitoring

None.

2.1.16 Computational Precision Requirements

None.

2.1.17 Algorithm Support Considerations

None.

2.1.18 Assumptions and Limitations

None.

2.2 Snow Ice Cover Description

The Snow Ice Cover (SIC) GIP is used to provide the VIIRS cloud mask with pixel-level snow and ice information, as shown in Figure 9. The GIP is updated with snow information from the Snow Cover EDR process and Ice information from the Ice Concentration IP.

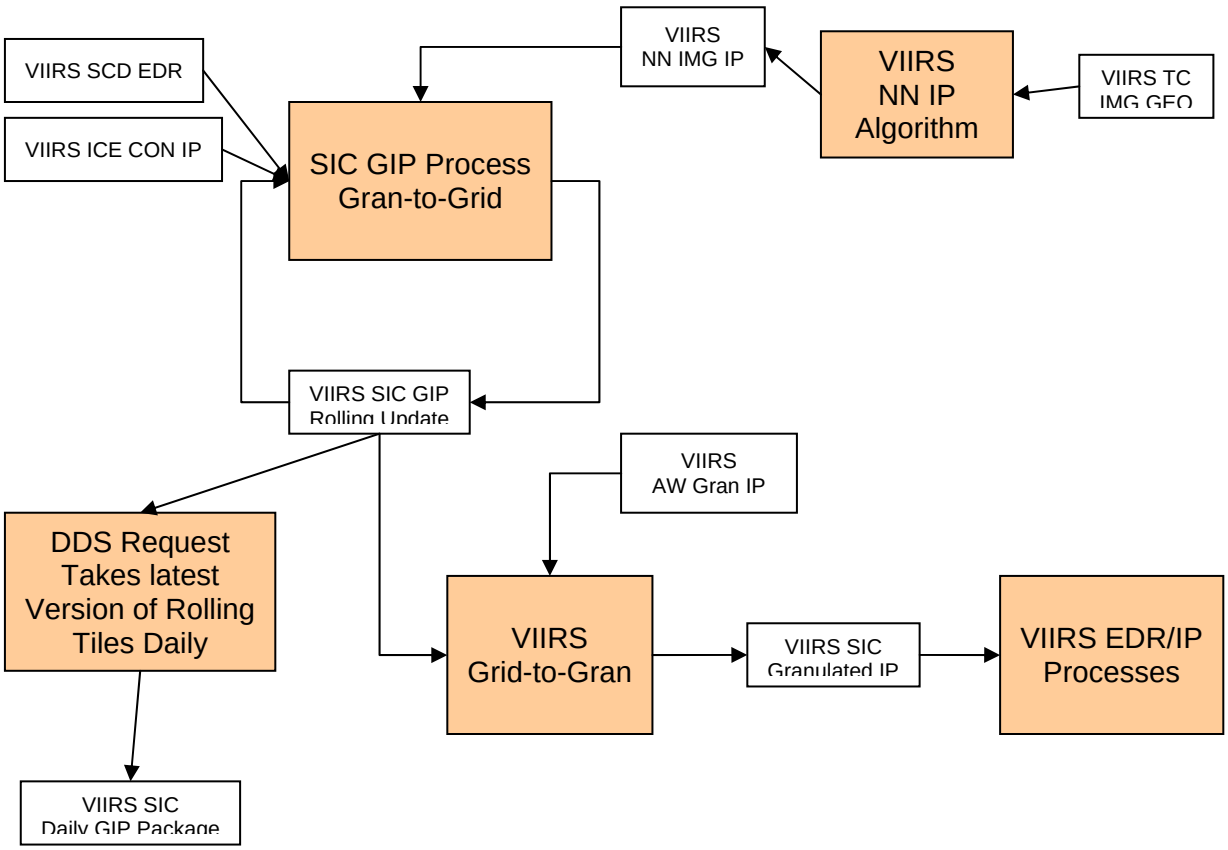

Figure 9. Snow Ice Cover Interrelationships Diagram

2.2.1 Interfaces

2.2.1.1 Inputs

2.2.1.1.1 GridToGran Inputs

Tables 10 and 11 show the GridToGran inputs.

Table 10. GridToGran Snow Ice Cover Input: VIIRS Area Weight IP Gran Product (VIIRS-Grid-To-Gran-GridIP-AW-SWATH-Mod-IP)

Input	Type/Size	Description	Units (where applicable) / Valid Range
Granule-Level Data Items			
tileList	UInt8 * 5184	0 = sinTileIdNotRequired 1 = sinTileIdRequired	0 - 1
actScans	Int32	Actual number of scans in the granule	0 - 48

Input	Type/Size	Description	Units (where applicable) / Valid Range
Pixel-Level Data Items			
tileId	UInt16 * 768 * 3200 * 10	Tile ID that this pixel maps to	0 - 5183
rowInTile	UInt16 * 768 * 3200 * 10	Row in the tile that this pixel maps to	0 - 299
colInTile	UInt16 * 768 * 3200 * 10	Column in the tile that this pixel maps to	0 - 599
weight	UInt16 * 768 * 3200 * 10	Weigh factor of grid cell	0 - 65000

Table 11. GridToGran Snow Ice Cover Input: Snow Ice Cover GIP Tiles (GridIP-VIIRS-Snow-Ice-Cover-Rolling-Tile)

Input	Type/Size	Description	Units (where applicable) / Valid Range
Cell-Level Data Items			
snowIceCover	UInt8 * 300 * 600	0 = no snow or ice 1 = snow or ice	0 - 1
geoError	UInt8 * 300 * 600	Geolocation error (0 at NADIR, 50 at edge of scan)	0 - 50
obsTime	Int64 * 300 * 600	Observation time (IET time)	microseconds; (-9223372036854775808) - (+9223372036854775807)

2.2.1.1.2 GranToGrid Inputs

Tables 12 through 15 show the GranToGrid inputs.

Table 12. GranToGrid Snow Ice Cover Input: Nearest Neighbor Imagery IP (VIIRS-GridIP-NN-Img-IP)

Input	Type	Description	Units (where applicable) / Valid Range
Granule-Level Data Items			
tileList	UInt8 * 5184	0 = sinTileIdNotRequired 1 = sinTileIdRequired	0 - 1
actScans	Int32	Actual number of scans in the granule	0 - 48
Pixel-Level Data Items			
rowInTile	UInt16 * 1536 * 6400	Row in the tile that this pixel maps to	0 - 299
colInTile	UInt16 * 1536 * 6400	Column in the tile that this pixel maps to	0 - 599
tileId	UInt16 * 1536 * 6400	Tile ID that this pixel maps to	0 - 5183

Table 13. GranToGrid Snow Ice Cover Input: VIIRS Snow Cover/Depth EDR (VIIRS-SCD-BINARY-SNOW-MAP-FEDR)

Input	Type	Description	Units (where applicable) / Valid Range
Granule-Level Data Items			
scdBinaryMapQuality	UInt8	Overall Quality	Percentage; 0 - 100
scdExclusionSummary	UInt8	Exclusion Summary	Percentage; 0 - 100
Pixel-Level Data Items			
scdBinaryMap	Int8 * 1536 * 6400	0 = Not Snow 1 = Snow	0 - 1
Overall Pixel Quality	2 bit(s) * 1536 * 6400	0 = Green (high) 1 = Yellow (medium) 2 = Red (bad) 3 = Fill (no retrieval)	0 - 3
Input SDR Quality	1 bit(s) * 1536 * 6400	0 = Good 1 = Bad	0 - 1
Cloud Confidence	2 bit(s) * 1536 * 6400	0 = confidently clear 1 = probably clear 2 = probably cloudy 3 = confidently cloudy	0 - 3
Solar Zenith Angle Exclusion	1 bit(s) * 1536 * 6400	0 = No (no exclusion) 1 = Yes (based on a tunable solar zenith angle exclusion threshold)	0 - 1
Aerosol Optical Thickness Exclusion	1 bit(s) * 1536 * 6400	0 = No (no exclusion) 1 = Yes (based on a tunable aerosol optical thickness exclusion threshold)	0 - 1
Snow Fraction Exclusion	1 bit(s) * 1536 * 6400	0 = No (no exclusion) 1 = Yes (based on a tunable snow fraction exclusion thresholds)	0 - 1
Thin Cirrus	1 bit(s) * 1536 * 6400	0 = No 1 = Yes (thin cirrus detected	0 - 1
Cloud Shadow	1 bit(s) * 1536 * 6400	0 = No 1 = Yes	0 - 1
Cloud Phase	2 bit(s) * 1536 * 6400	0 = Clear 1 = Water 2 = Ice 3 = Mixed	0 - 3
Forest	1 bit(s) * 1536 * 6400	0 = No 1 = Yes	0 - 1
Land/Water	2 bit(s) * 1536 * 6400	0 = Land 1 = Coastal 2 = Inland Water 3 = Ocean	0 - 3
Sun Glint	1 bit(s) * 1536 * 6400	0 = No 1 = Yes	0 - 1

Input	Type	Description	Units (where applicable) / Valid Range
Thermal Threshold Exceeded	1 bit(s) * 1536 * 6400	0 = No 1 = Yes (based on a tunable temperature threshold)	0 - 1
NDSI Quality	1 bit(s) * 1536 * 6400	0 = Good 1 = Bad	0 - 1
NDVI Quality	1 bit(s) * 1536 * 6400	0 = Good 1 = Bad	0 - 1
Fire	1 bit(s) * 1536 * 6400	0 = No 1 = Yes	0 - 1
Spare	4 bit(s) * 1536 * 6400	[spare quality bits]	n/a

Table 14. GranToGrid Snow Ice Cover Input: VIIRS Ice Concentration IP (VIIRS-I-Conc-IP)

Input	Type	Description	Units (where applicable) / Valid Range
Pixel-Level Data Items			
iceFraction	Float32 * 1536 * 6400	Ice Fraction	MinFloat - MaxFloat
iceConcWeights	Float32 * 1536 * 6400	Ice Concentration Weight Factor	MinFloat - MaxFloat

Table 15. GranToGrid Snow Ice Cover Tunable Parameters and Processing Coefficients

Input	Type	Description	Original Source
iceFractionThreshold	Float32	0.5 – used to determine ice pixels	Science code baseline
concWeightThreshold	Float32	0.04 – used to determine good quality pixels	Science code baseline
forceUpdateDayThreshold	Int32	10 – maximum number of days before the GIP must be updated	Science code baseline

2.2.1.2 Outputs

2.2.1.2.1 GridToGran Outputs

Tables 16 and 17 show the GridToGran outputs.

Table 16. GridToGran Snow Ice Cover Output: Granulated VIIRS Snow Ice Cover (VIIRS-GridIP-VIIRS-Snow-Ice-Cover-Mod-Gran)

Input	Type	Description	Units (where applicable) / Valid Range
Pixel-Level Data Items			
snowIceCover	UInt8 * 768 * 3200	0 = no snow or ice 1 = snow or ice	0 - 1

Table 17. GridToGran Snow Ice Cover Output: Granulated VIIRS Snow Ice Cover (OMPS-TC-GridIP-VIIRS-Snow-Ice-Fraction-Gran)

Input	Type	Description	Units (where applicable) / Valid Range
Pixel-Level Data Items			
snowIce	Float32 * 5* 35	Snow/Ice Fraction	0 - 1

2.2.1.2.2 GranToGrid Outputs

Table 18 shows the GranToGrid outputs.

Table 18. GranToGrid Snow Ice Cover Output: Snow Ice Cover GIP Tiles (GridIP-VIIRS-Snow-Ice-Cover-Rolling-Tile)

Input	Type	Description	Units (where applicable) / Valid Range
Cell-Level Data Items			
snowIceCover	UInt8 * 300 * 600	0 = no snow or ice 1 = snow or ice	0 - 1
geoError	UInt8 * 300 * 600	Geolocation error (0 at NADIR, 50 at edge of scan)	0 - 50
obsTime	Int64 * 300 * 600	Observation time (IET time)	microseconds; (-9223372036854775808) - (+9223372036854775807)

2.2.2 Algorithm Processing

2.2.2.1 GridToGran

The GridToGran Snow Ice Cover algorithm granulates the ‘snowIceCover’ field using the Greatest Weight Neighbor method at moderate resolution.

2.2.2.2 GranToGrid

The GranToGrid process for the Snow Ice Cover uses the Ice Concentration IP and Snow Cover Binary Map EDR (both at imagery resolution) to perform rolling updates to the sinusoidal GIP. This algorithm does not perform aggregation. This algorithm performs compositing by looping over the grid cells affected by a particular granule, checking for a quality observation, ensuring the observation is newer than what is already in the GIP, and updating the GIP with the data from the Nearest Neighbor pixel(s). A quality observation is determined by any of the following:

- snow cover = 1 and snow cover quality is ‘good’
- ice fraction > threshold and concentration weight > threshold
- concentration weight > threshold and snow cover quality is ‘good’

The distance of the observed pixel from nadir is also a factor when deciding whether to update a GIP or not.

2.2.3 Graceful Degradation

2.2.3.1 Graceful Degradation Inputs

None.

2.2.3.2 Graceful Degradation Processing

None.

2.2.3.3 Graceful Degradation Outputs

None.

2.2.4 Exception Handling

This GIP algorithm inherits the Processing (PRO) Common error handling strategy of removing output products when an error path is encountered. This error condition is handled at the level encountered and then the failure condition is forwarded to the calling program. A controller algorithm then removes any output products that it has, and the error condition continues to propagate up in the case of nested controllers.

2.2.5 Data Quality Monitoring

None.

2.2.6 Computational Precision Requirements

None.

2.2.7 Algorithm Support Considerations

None.

2.2.8 Assumptions and Limitations

None.

2.3 Quarterly Surface Type Description

The Quarterly Surface Type GIP is produced from the processing of 12 monthly GIPs[21] using rules-based surface type classification[22] software, as shown in Figure 10. The surface is classified as one of the 17 International Geosphere Biosphere Program (IGBP) classes. The production of the QST GIP is an algorithm support function. Several algorithms use the QST. The surface type EDR is a granulated QST updated for snow and fires.

[21] Monthly SR/BT/VI GIP
[22] Decision Tree

Check the JPSS MIS Server at https://jpssmis.gsfc.nasa.gov/frontmenu_dsp.cfm to verify that this is the correct version prior to use

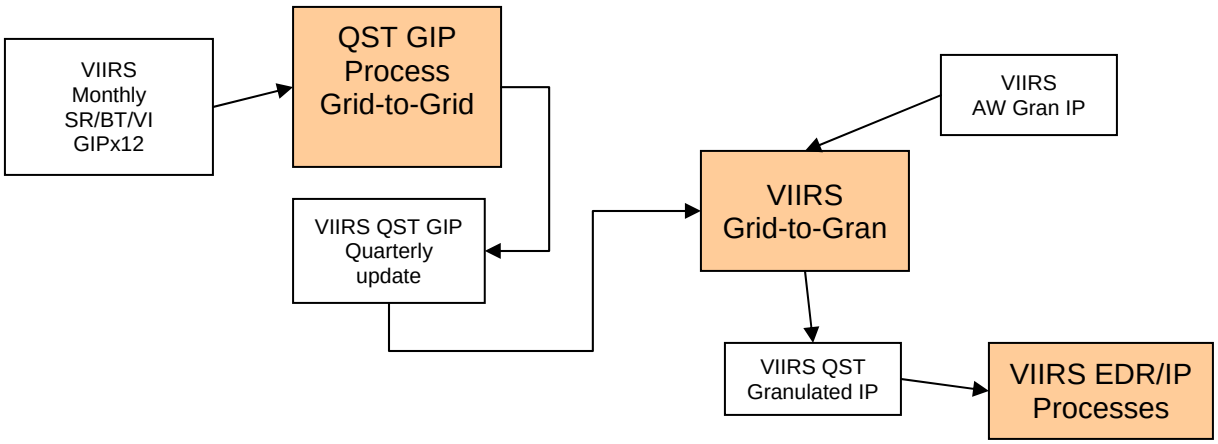

Figure 10. Quarterly Surface Type Interrelationships Diagram

2.3.1 Interfaces

2.3.1.1 Inputs (GridToGran)

Tables 19, 20, and 21 show the GridToGran inputs.

Table 19. GridToGran Quarterly Surface Type Input: VIIRS Area Weight IP Gran Product (VIIRS-Grid-To-Gran-GridIP-AW-SWATH-Mod-IP)

Input	Type/Size	Description	Units (where applicable) / Valid Range
Granule-Level Data Items			
tileList	UInt8 * 5184	0 = sinTileIdNotRequired 1 = sinTileIdRequired	0 - 1
actScans	Int32	Actual number of scans in the granule	0 - 48
Pixel-Level Data Items			
tileId	UInt16 * 768 * 3200 * 10	Tile ID that this pixel maps to	0 - 5183

Table 20. GridToGran Quarterly Surface Type Input: VIIRS Quarterly Surface Type GridIP Tiles (GridIP-VIIRS-Qst-Quarterly-Tile)

Input	Type/Size	Description	Units (where applicable) / Valid Range
Cell-Level Data Items			
igbp	UInt8 * 300 * 600	1 = evergreen needleleaf forest 2 = evergreen broadleaf forest 3 = deciduous needleleaf forest 4 = deciduous broadleaf forest 5 = mixed forests 6 = closed shrubland 7 = open shrublands 8 = woody savannas 9 = savannas 10 = grasslands 11 = permanent wetlands 12 = croplands 13 = urban and built-up 14 = cropland/natural vegetation mosaic 15 = snow and ice 16 = barren or sparsely vegetated 17 = water 30=unclassified 31= fill value	1 - 17
confidence	UInt8 * 300 * 600	100 = confidence value in percentage 254 = surface type defined by GIS/DCW	percentage; 100 - 254
numBadGreenestMonths	3 bit(s) * 300 * 600	0 = 0 months 1 = 1 months 2 = 2 months 3 = 3 months 4 = 4 months 5 = 5 months 6 = 6 months 7 = seven or more months	0 - 7
numBadWarmestMonths	2 bit(s) * 300 * 600	0 = 0 months 1 = 1 months 2 = 2 months 3 = three or more months	0 - 3
classificationChanged	1 bit(s) * 300 * 600	0 = no surface type classification change 1 = surface type classification changed	0 - 1
spare	2 bit(s) * 300 * 600		n/a

Table 21. GridToGran Quarterly Surface Type Output: Granulated Quarterly Surface Type (CRIS-GIP-LAND-FRAC-Gran)

Input	Type/Size	Description	Units (where applicable) / Valid Range
Land Fraction	Float32 * 30 * 9	Percent per FOV	0 - 100

2.3.1.2 Outputs (GridToGran)

Table 22 shows the GridToGran outputs.

Table 22. GridToGran Quarterly Surface Type Output: Granulated Quarterly Surface Type (VIIRS-GridIP-VIIRS-Qst-Mod-Gran)

Input	Type/Size	Description	Units (where applicable) / Valid Range
Pixel-Level Data Items			
igbp	UInt8 * 768 * 3200	1 = evergreen needleleaf forest 2 = evergreen broadleaf forest 3 = deciduous needleleaf forest 4 = deciduous broadleaf forest 5 = mixed forests 6 = closed shrubland 7 = open shrublands 8 = woody savannas 9 = savannas 10 = grasslands 11 = permanent wetlands 12 = croplands 13 = urban and built-up 14 = cropland/natural vegetation mosaic 15 = snow and ice 16 = barren or sparsely vegetated 17 = water 30=unclassified 31= fill value	1 - 17
confidence	UInt8 * 768 * 3200	Percent confidence	0 - 100

2.3.2 Algorithm Processing

2.3.2.1 GridToGran

The GridToGran Quarterly Surface Type algorithm granulates the ‘igbp’ and ‘confidence’ fields using the Greatest Weight Neighbor method at moderate resolution.

2.3.3 Graceful Degradation

2.3.3.1 Graceful Degradation Inputs

There is one case where input graceful degradation is indicated in the GridToGran.

> An input retrieved for the algorithm had its N_Graceful_Degradation metadata field set to YES (propagation).

2.3.3.2 Graceful Degradation Processing

None.

2.3.3.3 Graceful Degradation Outputs

None.

2.3.4 Exception Handling

This GIP algorithm inherits the Processing (PRO) Common error handling strategy of removing output products when an error path is encountered. This error condition is handled at the level encountered and then the failure condition is escalated up the stack. A controller algorithm then removes any output products that it has, and the error condition continues to propagate up in the case of nested controllers.

2.3.5 Data Quality Monitoring

None.

2.3.6 Computational Precision Requirements

None.

2.3.7 Algorithm Support Considerations

None.

2.3.8 Assumptions and Limitations

None.

2.4 Quarterly Surface Type – Land Water Mask Description

The QST-LWM GIP is a merged QST and MODIS Land Water Mask, as shown in Figure 11. The information in this product feeds into VIIRS Cloud Mask and replaces the Olsen Ecosystem database previously used by Cloud Mask. It augments the QST GIP by identifying coast and in-land water. This GIP is produced off-line and treated like static ancillary in terms of data updating process.[23]

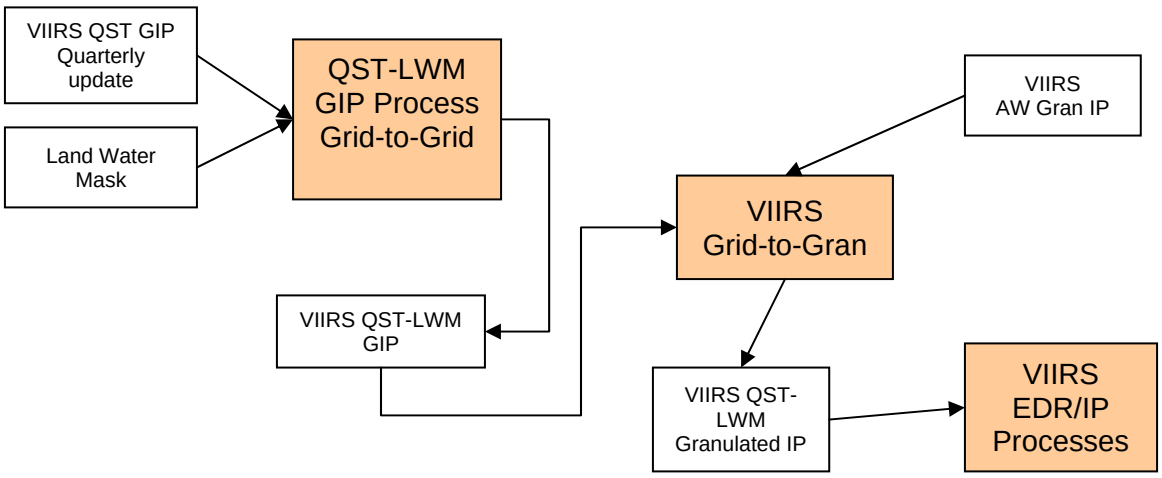

Figure 11. Quarterly Surface Type Land Water Mask Interrelationships Diagram

[23] Similar to QST and Annual Max/Min NDVI

Check the JPSS MIS Server at https://jpssmis.gsfc.nasa.gov/frontmenu_dsp.cfm to verify that this is the correct version prior to use

2.4.1 Interfaces

2.4.1.1 Inputs (GridToGran)

Tables 23 and 24 show the GridToGran inputs.

Table 23. GridToGran Quarterly Surface Type – Land Water Mask Input: VIIRS Area Weight IP Gran Product (VIIRS-Grid-To-Gran-GridIP-AW-SWATH-Mod-IP)

Input	Type/Size	Description	Units (where applicable) / Valid Range
Granule-Level Data Items			
tileList	UInt8 * 5184	0 = sinTileIdNotRequired 1 = sinTileIdRequired	0 - 1
actScans	Int32	Actual number of scans in the granule	0 - 48
Pixel-Level Data Items			
tileId	UInt16 * 768 * 3200 * 10	Tile ID that this pixel maps to	0 - 5183

Table 24. GridToGran Quarterly Surface Type – Land Water Mask Input: VIIRS Quarterly Surface Type – Land Water Mask GridIP Tiles (GridIP-VIIRS-Qst-Lwm-Quarterly-Tile)

Input	Type/Size	Description	Units (where applicable) / Valid Range
Cell-Level Data Items			
qstlwm	UInt8 * 300 * 600	1 = evergreen needleleaf forest 2 = evergreen broadleaf forest 3 = deciduous needleleaf forest 4 = deciduous broadleaf forest 5 = mixed forests 6 = closed shrubland 7 = open shrublands 8 = woody savannas 9 = savannas 10 = grasslands 11 = permanent wetlands 12 = croplands 13 = urban and built-up 14 = cropland/natural vegetation mosaic 15 = snow and ice 16 = barren or sparsely vegetated 17 = Ocean/Sea 18 = Inland Water 19 = Coastal Water 20 = Unclassified Land	1 - 20

2.4.1.2 Outputs (GridToGran)

Table 25 shows the GridToGran outputs.

Check the JPSS MIS Server at https://jpssmis.gsfc.nasa.gov/frontmenu_dsp.cfm to verify that this is the correct version prior to use

Table 25. GridToGran Quarterly Surface Type – Land Water Mask Output: Granulated Quarterly Surface Type – Land Water Mask (VIIRS-GridIP-VIIRS-Qst-Lwm-Mod-Gran)

Input	Type/Size	Description	Units (where applicable) / Valid Range
Pixel-Level Data Items			
qstlwm	UInt8 * 768 * 3200	1 = evergreen needleleaf forest 2 = evergreen broadleaf forest 3 = deciduous needleleaf forest 4 = deciduous broadleaf forest 5 = mixed forests 6 = closed shrubland 7 = open shrublands 8 = woody savannas 9 = savannas 10 = grasslands 11 = permanent wetlands 12 = croplands 13 = urban and built-up 14 = cropland/natural vegetation mosaic 15 = snow and ice 16 = barren or sparsely vegetated 17 = Ocean/Sea 18 = Inland Water 19 = Coastal Water 20 = Unclassified Land	1 - 20

2.4.2 Algorithm Processing

2.4.2.1 GridToGran

The GridToGran Quarterly Surface Type – Land Water Mask algorithm granulates the 'qstlwm' field using the Greatest Weight Neighbor method at moderate resolution.

2.4.3 Graceful Degradation

2.4.3.1 Graceful Degradation Inputs

There is one case where input graceful degradation is indicated in the GridToGran.

1. An input retrieved for the algorithm had its N_Graceful_Degradation metadata field set to YES (propagation).

2.4.3.2 Graceful Degradation Processing

None.

2.4.3.3 Graceful Degradation Outputs

None.

2.4.4 Exception Handling

This GIP algorithm inherits the Processing (PRO) Common error handling strategy of removing output products when an error path is encountered. This error condition is handled at the level encountered and then the failure condition is forwarded to the calling program. A controller

algorithm then removes any output products that it has, and the error condition continues to propagate up in the case of nested controllers.

2.4.5 Data Quality Monitoring

None.

2.4.6 Computational Precision Requirements

None.

2.4.7 Algorithm Support Considerations

None.

2.4.8 Assumptions and Limitations

None.

2.5 Annual Max/Min NDVI Description

The Annual Max/Min NDVI GIP is produced by the same algorithm support function that produces the QST GIP. The information from this GIP is used by the Surface Type EDR to determine vegetative fraction. As with QST GIP, updates to this GIP follow the static ancillary paradigm (i.e. updates are processed as a software build). Figure 12 shows the Annual Max/Min NDVI interrelationships diagram.

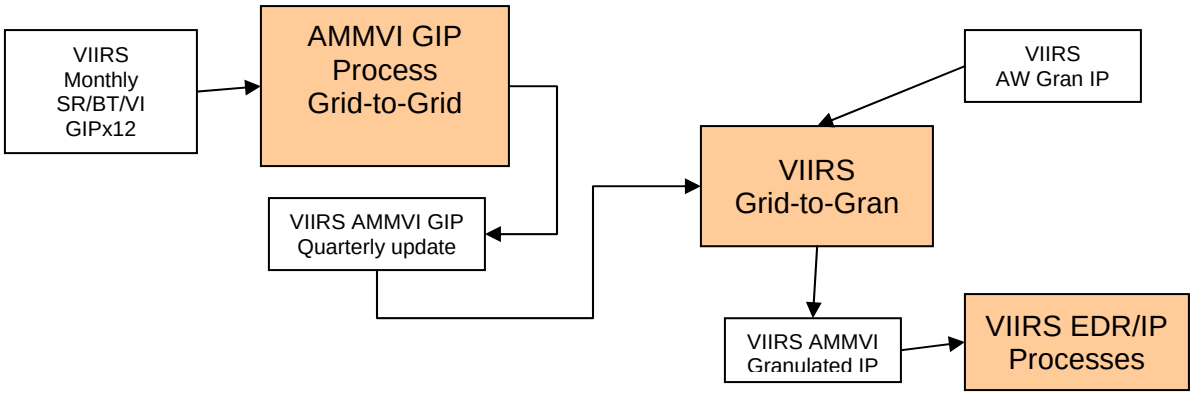

Figure 12. Annual Max/Min NDVI Interrelationships Diagram

2.5.1 Interfaces

2.5.1.1 Inputs (GridToGran)

Tables 26 through 29 show the GridToGran inputs.

Table 26. GridToGran Annual Max/Min NDVI Input: VIIRS Area Weight IP Gran Product (VIIRS-Grid-To-Gran-GridIP-AW-SWATH-Mod-IP)

Input	Type/Size	Description	Units (where applicable) / Valid Range
Granule-Level Data Items			
tileList	UInt8 * 5184	0 = sinTileIdNotRequired 1 = sinTileIdRequired	0 - 1
actScans	Int32	Actual number of scans in the granule	0 - 48
Pixel-Level Data Items			
tileId	UInt16 * 768 * 3200 * 10	Tile ID that this pixel maps to	0 - 5183

Table 27. GridToGran Annual Max/Min NDVI Input: Annual Max/Min NDVI Tiles (GridIP-VIIRS-Ann-Max-Min-Ndvi-Quarterly-Tile)

Input	Type/Size	Description	Units (where applicable) / Valid Range
Tile-Level Data Items			
maxNdviScale	Float32	Scale factor for Maximum NDVI	Minfloat – Maxfloat
maxNdviOffset	Float32	Offset for Maximum NDVI	Minfloat - Maxfloat
minNdviScale	Float32	Scale factor for Minimum NDVI	Minfloat – Maxfloat
minNdviOffset	Float32	Offset for Minimum NDVI	Minfloat - Maxfloat
Cell-Level Data Items			
maxNdvi	UInt16 * numLandCells	Maximum NDVI	Scaled unitless ; 0 - 65527 Unscaled (-1.0) - (+1.0)
minNdvi	UInt16 * numLandCells	Minimum NDVI	Scaled unitless ; 0 - 65527 Unscaled (-1.0) - (+1.0)
maxNdviNeighbor	1 bit(s) * numLandCells	0 = global minimum 1 = within neighborhood	0 - 1
minNdviNeighbor	1 bit(s) * numLandCells	0 = global maximum 1 = within neighborhood	0 - 1
spare	6 bit(s) * numLandCells	[spare quality bits]	n/a

Table 28. GridToGran Annual Max/Min NDVI Input: Sinusoidal Map Earth/Land Lookup Table (VIIRS-Grid-SIN-Tiles-Earth-Land-LUT)

Input	Type/Size	Description	Units (where applicable) / Valid Range
classification	UInt8 * 72 * 72	Information for each tile on the Sinusoidal Grid 0 = off the earth 1 = on the earth - not land 3 = on the earth - land	0 - 3

Table 29. GridToGran Annual Max/Min NDVI Input: Master Land Index Tiles (GridIP-VIIRS-MLI-Tile)

Input	Type/Size	Description	Units (where applicable) / Valid Range
Tile-Level Data Items			
numLandCells	Int32	Number of land cells for this tile	0 - 180000
numLandCells5k	UInt16	Number of 5-km land cells for this tile	0 - 7200

Input	Type/Size	Description	Units (where applicable) / Valid Range
Cell-Level Data Items			
indices	Int32 * 300 * 600	Offset into the indirect-indexed tile product for the cell if land; FILL if water	0 - 179999
indices5k	UInt16 * 60 * 120	Offset into the indirect-indexed tile product for the 5-km cell if land; FILL if water	0 - 7199

2.5.1.2 Outputs (GridToGran)

Table 30 shows the GridToGran outputs.

Table 30. GridToGran Annual Max/Min NDVI Output: Granulated VIIRS Annual Max/Min NDVI (VIIRS-GridIP-VIIRS-Ann-Max-Min-Ndvi-Mod-Gran)

Input	Type/Size	Description	Units (where applicable) / Valid Range
Pixel-Level Data Items			
maxNdvi	Float32 * 768 * 3200	Maximum NDVI	(-1.0) - (+1.0)
minNdvi	Float32 * 768 * 3200	Minimum NDVI	(-1.0) - (+1.0)
maxNdviNeighbor	1 bit(s) * 768 * 3200	0 = global minimum 1 = within neighborhood	0 - 1
minNdviNeighbor	1 bit(s) * 768 * 3200	0 = global maximum 1 = within neighborhood	0 - 1
spare	6 bit(s) * 768 * 3200	[spare quality bits]	n/a

2.5.2 Algorithm Processing

2.5.2.1 GridToGran

The GridToGran Annual Max/Min NDVI algorithm granulates the ‘maxNdvi’, ‘minNdvi’, and ‘qcFlags’ fields using the Greatest Weight Neighbor method at moderate resolution.

2.5.3 Graceful Degradation

2.5.3.1 Graceful Degradation Inputs

There is one case where input graceful degradation is indicated in the GridToGran.

1. An input retrieved for the algorithm had its N_Graceful_Degradation metadata field set to YES (propagation).

2.5.3.2 Graceful Degradation Processing

None.

2.5.3.3 Graceful Degradation Outputs

None.

2.5.4 Exception Handling

This GIP algorithm inherits the Processing (PRO) Common error handling strategy of removing output products when an error path is encountered. This error condition is handled at the level encountered and then the failure condition is forwarded to the calling program. A controller algorithm then removes any output products that it has, and the error condition continues to propagate up in the case of nested controllers.

2.5.5 Data Quality Monitoring

None.

2.5.6 Computational Precision Requirements

None.

2.5.7 Algorithm Support Considerations

None.

2.5.8 Assumptions and Limitations

None.

2.6 Land Surface Albedo Description

The Land Surface Albedo GIP is used by the Land Surface Albedo EDR. The GIP is produced from a collection of 17 days of surface reflectances assembled as daily surface reflectance along with a BRDF Archetypal GIP, as shown in Figure 13.

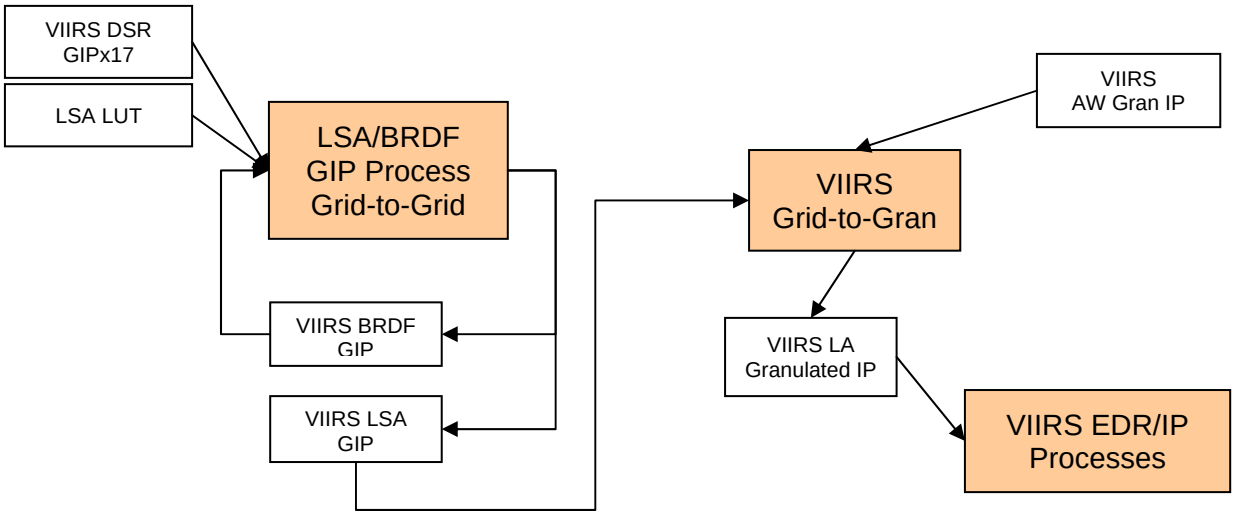

Figure 13. Land Surface Albedo Interrelationships Diagram

2.6.1 Interfaces

2.6.1.1 Inputs

2.6.1.1.1 GridToGran Inputs

Tables 31 through 33 show the GridToGran inputs.

Table 31. GridToGran Land Surface Albedo Input: VIIRS Area Weight IP Gran Product (VIIRS-Grid-To-Gran-GridIP-AW-SWATH-Mod-IP)

Input	Type/Size	Description	Units (where applicable) / Valid Range
Granule-Level Data Items			
tileList	UInt8 * 5184	0 = sinTileIdNotRequired 1 = sinTileIdRequired	0 - 1
actScans	Int32	Actual number of scans in the granule	0 - 48
Pixel-Level Data Items			
tileId	UInt16 * 768 * 3200 * 10	Tile ID that this pixel maps to	0 - 5183

Table 32. GridToGran Land Surface Albedo Input: VIIRS Land Surface Albedo GridIP Tiles (GridIP-VIIRS-Land-Surf-Albedo-17Day-Tile)

Input	Type/Size	Description	Units (where applicable) / Valid Range
Tile-Level Data Items			
coeffScale	Float32	Scale Factor for coefficients	Minfloat - Maxfloat
coeffOffset	Float32	Offset for coefficients	Minfloat - Maxfloat
blackSkyAlbedo Scale	Float32	Scale Factor for Black Sky Albedo	Minfloat - Maxfloat
blackSkyAlbedo Offset	Float32	Offset for Black Sky Albedo	Minfloat - Maxfloat
whiteSkyAlbedo Scale	Float32	Scale Factor for White Sky Albedo	Minfloat - Maxfloat
whiteSkyAlbedo Offset	Float32	Offset for White Sky Albedo	Minfloat - Maxfloat
nbarScale	Float32	Scale Factor for NBAR	Minfloat - Maxfloat
nbarOffset	Float32	Offset for NBAR	Minfloat - Maxfloat
meanSolarZenith Scale	Float32	Scale Factor for Mean solar zenith angle	Minfloat - Maxfloat
meanSolarZenith Offset	Float32	Offset for Mean solar zenith angle	Minfloat - Maxfloat
Cell-Level Data Items			
coeff	UInt16 * 3 * 3 * 9 * numLandCells	Array of coefficients (parameters) for BRDF Kernel model having three-terms: isotropic , volumetric, and geometric	0 - (+1.0) (when unscaled)
blackSkyAlbedo	UInt16 * 3 * 9 * numLandCells	Spectral albedo in the absence of a diffuse component	Scaled unitless; 0 - 65527
whiteSkyAlbedo	UInt16 * 3 * 9 * numLandCells	Spectral albedo in the absence of a direct component, assuming an isotropic diffuse surface	Scaled unitless; 0 - 65527

Check the JPSS MIS Server at https://jpssmis.gsfc.nasa.gov/frontmenu_dsp.cfm to verify that this is the correct version prior to use

Input	Type/Size	Description	Units (where applicable) / Valid Range
nbar	UInt16 * 3 * 9 * numLandCells	Nadir BRDF Adjusted Reflectance calculated from BRDF at the mean solar zenith angle	Scaled unitless; 0 - 65527
meanSolarZenith	UInt16 * 3 * numLandCells	Mean solar zenith angle derived from all the valid surface reflectance data (observations)	Scaled Radians; 0 - 65527
kernel	UInt8 * 3 * 2 * numLandCells	Array of values indicating which of eight possible kernel types, two volumetric and six geometric, are selected for the BRDF model	0 - 7
spare	3 bit(s) * 3 * numLandCells	[spare quality bits]	n/a
criterion	2 bit(s) * 3 * numLandCells	0 = RMSE Heritage 1 = RMSE 2 = Coeffs Variance 3 = White-sky albedo variance	0 - 3
retrievalQuality	1 bit(s) * 3 * numLandCells	0 = poor 1 = good	0 - 1
inversionType	2 bit(s) * 3 * numLandCells	0 = N/A 1 = full inversion 2 = magnitude inversion 3 = history	0 - 3

Table 33. GridToGran Land Surface Albedo Input: Sinusoidal Map Earth/Land Lookup Table (VIIRS-Grid-SIN-Tiles-Earth-Land-LUT)

Input	Type/Size	Description	Units (where applicable) / Valid Range
classification	UInt8 * 72 * 72	Information for each tile on the Sinusoidal Grid 0 = off the earth 1 = on the earth - not land 3 = on the earth - land	0 - 3

Table 34. GridToGran Land Surface Albedo Input: Master Land Index Tiles (GridIP-VIIRS-MLI-Tile)

Input	Type/Size	Description	Units (where applicable) / Valid Range
Tile-Level Data Items			
numLandCells	Int32	Number of land cells for this tile	0 - 180000
numLandCells5k	UInt16	Number of 5-km land cells for this tile	0 - 7200
Cell-Level Data Items			
indices	Int32 * 300 * 600	Offset into the indirect-indexed tile product for the cell if land; FILL if water	0 - 179999
indices5k	UInt16 * 60 * 120	Offset into the indirect-indexed tile product for the 5-km cell if land; FILL if water	0 - 7199

2.6.1.1.2 GridToGrid Inputs

Tables 35 through 41 show the GridToGrid inputs.

Table 35. GridToGrid Land Surface Albedo Input: Daily Surface Reflectance GIP Tiles (GridIP-VIIRS-Daily-Surf-Refl-Daily-Tile)

Input	Type/Size	Description	Units (where applicable) / Valid Range
Tile-Level Data Items			
maxObs	Int32	Maximum number of observations for this tile	0 - 15
surfReflectScale	Float32	Scale factor for Surface Reflectance	Minfloat - Maxfloat
surfReflectOffset	Float32	Offset for Surface Reflectance	Minfloat - Maxfloat
solZenAngScale	Float32	Scale factor for Solar Zenith Angle	Minfloat - Maxfloat
solZenAngOffset	Float32	Offset for Solar Zenith Angle	Minfloat - Maxfloat
senZenAngScale	Float32	Scale factor for Sensor Zenith Angle	Minfloat - Maxfloat
senZenAngOffset	Float32	Offset for Sensor Zenith Angle	Minfloat - Maxfloat
relAziAngScale	Float32	Scale factor for Relative Azimuth Angle	Minfloat - Maxfloat
relAziAngOffset	Float32	Offset for Relative Azimuth Angle	Minfloat - Maxfloat
Cell-Level Data Items			
surfReflect	UInt16 * 9 * 15 * numLandCells	Surface Reflectance	0 - 65527
solZenAng	UInt16 * 15 * numLandCells	Solar Zenith Angle	Scaled Radians; 0 - 65527
senZenAng	UInt16 * 15 * numLandCells	Sensor Zenith Angle	Scaled Radians; 0 - 65527
relAziAng	UInt16 * 15 * numLandCells	Relative Azimuth Angle	Scaled Radians; 0 - 65527
numOfObs	UInt8 * numLandCells	Number of recorded observations for this cell	0 - 15
Cloud Mask Quality	2 bit(s) * 15 * numLandCells	0 = Poor 1 = Low 2 = Medium 3 = High	0 - 3
Cloud Detection And Confidence	2 bit(s) * 15 * numLandCells	0 = Confident Cloudy 1 = Probably Cloudy 2 = Confident Clear 3 = Probably Clear	0 - 3
Day/Night	1 bit(s) * 15 * numLandCells	0 = Night 1 = Day	0 - 1
Low Sun	1 bit(s) * 15 * numLandCells	0 = No Low Sun 1 = Low Sun	0 - 1
Sun Glint	2 bit(s) * 15 * numLandCells	0 = None 1 = Geometry Based 2 = Wind Speed Based 3 = Geometry and Wind Based	0 - 3
Land/Water Background	3 bit(s) * 15 * numLandCells	0 = Land And Desert 1 = Land No Desert 2 = Inland Water 3 = Sea Water 5 = Coastal	0 - 5
Shadow Detected	1 bit(s) * 15 * numLandCells	0 = No 1 = Yes	0 - 1
Non Cloud Obstruction (Heavy Aerosol)	1 bit(s) * 15 * numLandCells	0 = No 1 = Yes	0 - 1

Input	Type/Size	Description	Units (where applicable) / Valid Range
Fire Detected (Cloud Mask)	1 bit(s) * 15 * numLandCells	0 = No 1 = Yes	0 - 1
Thin Cirrus (Solar RM9)	1 bit(s) * 15 * numLandCells	0 = No Cloud 1 = Cloud	0 - 1
Thin Cirrus IR	1 bit(s) * 15 * numLandCells	0 = No Cloud 1 = Cloud	0 - 1
Bad M1 SDR Data	1 bit(s) * 15 * numLandCells	0 = No 1 = Yes	0 - 1
Bad M2 SDR Data	1 bit(s) * 15 * numLandCells	0 = No 1 = Yes	0 - 1
Bad M3 SDR Data	1 bit(s) * 15 * numLandCells	0 = No 1 = Yes	0 - 1
Bad M4 SDR Data	1 bit(s) * 15 * numLandCells	0 = No 1 = Yes	0 - 1
Bad M5 SDR Data	1 bit(s) * 15 * numLandCells	0 = No 1 = Yes	0 - 1
Bad M7 SDR Data	1 bit(s) * 15 * numLandCells	0 = No 1 = Yes	0 - 1
Bad M8 SDR Data	1 bit(s) * 15 * numLandCells	0 = No 1 = Yes	0 - 1
Bad M10 SDR Data	1 bit(s) * 15 * numLandCells	0 = No 1 = Yes	0 - 1
Bad M11 SDR Data	1 bit(s) * 15 * numLandCells	0 = No 1 = Yes	0 - 1
Bad I1 SDR Data	1 bit(s) * 15 * numLandCells	0 = No 1 = Yes	0 - 1
Bad I2 SDR Data	1 bit(s) * 15 * numLandCells	0 = No 1 = Yes	0 - 1
Bad I3 SDR Data	1 bit(s) * 15 * numLandCells	0 = No 1 = Yes	0 - 1
Overall Quality of AOT	1 bit(s) * 15 * numLandCells	0 = No 1 = Yes	0 - 1
Missing AOT Input Data	1 bit(s) * 15 * numLandCells	0 = No 1 = Yes	0 - 1
Missing AM Input Data	1 bit(s) * 15 * numLandCells	0 = No 1 = Yes	0 - 1
Missing PW Input Data	1 bit(s) * 15 * numLandCells	0 = No 1 = Yes	0 - 1
Missing OZ Input Data	1 bit(s) * 15 * numLandCells	0 = No 1 = Yes	0 - 1
Missing SP Input Data	1 bit(s) * 15 * numLandCells	0 = No 1 = Yes	0 - 1
Overall Quality M1 SR Data	1 bit(s) * 15 * numLandCells	0 = No 1 = Yes	0 - 1
Overall Quality M2 SR Data	1 bit(s) * 15 * numLandCells	0 = No 1 = Yes	0 - 1
Overall Quality M3 SR Data	1 bit(s) * 15 * numLandCells	0 = No 1 = Yes	0 - 1
Overall Quality M4 SR Data	1 bit(s) * 15 * numLandCells	0 = No 1 = Yes	0 - 1
Overall Quality M5 SR Data	1 bit(s) * 15 * numLandCells	0 = No 1 = Yes	0 - 1

Input	Type/Size	Description	Units (where applicable) / Valid Range
Overall Quality M7 SR Data	1 bit(s) * 15 * numLandCells	0 = No 1 = Yes	0 - 1
Overall Quality M8 SR Data	1 bit(s) * 15 * numLandCells	0 = No 1 = Yes	0 - 1
Overall Quality M10 SR Data	1 bit(s) * 15 * numLandCells	0 = No 1 = Yes	0 - 1
Overall Quality M11 SR Data	1 bit(s) * 15 * numLandCells	0 = No 1 = Yes	0 - 1
Overall Quality I1 SR Data	1 bit(s) * 15 * numLandCells	0 = No 1 = Yes	0 - 1
Overall Quality I2 SR Data	1 bit(s) * 15 * numLandCells	0 = No 1 = Yes	0 - 1
Overall Quality I3 SR Data	1 bit(s) * 15 * numLandCells	0 = No 1 = Yes	0 - 1
Snow/Ice	1 bit(s) * 15 * numLandCells	0 = No Snow/Ice 1 = Snow/Ice	0 - 1
Spare	1 bit(s) * 15 * numLandCells	[spare quality bits]	n/a

Table 36. GridToGrid Land Surface Albedo Input: BRDF Archetypal GIP Tiles (GridIP-VIIRS-Brdf-Arch-17Day-Tile)

Input	Type/Size	Description	Units (where applicable) / Valid Range
Tile-Level Data Items			
coeffScale	Float32	Scale Factor for coefficients	Minfloat - Maxfloat
coeffOffset	Float32	Offset for coefficients	Minfloat - Maxfloat
Cell-Level Data Items			
updateDate	Int64 * 3 * numLandCells	Update date/time for this cell	IET microseconds; Maxint - Maxint
coeff	UInt16 * 3 * 3 * 9 * numLandCells	Array of coefficients (parameters) for BRDF Kernel model having three-terms: isotropic , volumetric, and geometric	0 - (+1.0)
kernel	UInt8 * 3 * 2 * numLandCells	Array of values indicating which of eight possible kernel types, two volumetric and six geometric, are selected for the BRDF model	0 - 255
spare	3 bit(s) * 3 * numLandCells	[spare quality bits]	n/a
criterion	2 bit(s) * 3 * numLandCells	0 = RMSE Heritage 1 = RMSE 2 = Coeffs Variance 3 = White-sky albedo variance	0 - 3
retrievalQuality	1 bit(s) * 3 * numLandCells	0 = poor 1 = good	0 - 1
inversionType	2 bit(s) * 3 * numLandCells	0 = N/A 1 = full inversion 2 = magnitude inversion 3 = history	0 - 3

Table 37. GridToGrid Land Surface Albedo Input: VIIRS Land Surface Albedo GridIP Tiles (GridIP-VIIRS-Land-Surf-Albedo-17Day-Tile)

Input	Type/Size	Description	Units (where applicable) / Valid Range
Tile-Level Data Items			
coeffScale	Float32	Scale Factor for coefficients	Minfloat - Maxfloat
coeffOffset	Float32	Offset for coefficients	Minfloat - Maxfloat
blackSkyAlbedo Scale	Float32	Scale Factor for Black Sky Albedo	Minfloat - Maxfloat
blackSkyAlbedo Offset	Float32	Offset for Black Sky Albedo	Minfloat - Maxfloat
whiteSkyAlbedo Scale	Float32	Scale Factor for White Sky Albedo	Minfloat - Maxfloat
whiteSkyAlbedo Offset	Float32	Offset for White Sky Albedo	Minfloat - Maxfloat
nbarScale	Float32	Scale Factor for NBAR	Minfloat - Maxfloat
nbarOffset	Float32	Offset for NBAR	Minfloat - Maxfloat
meanSolarZenith Scale	Float32	Scale Factor for Mean solar zenith angle	Minfloat - Maxfloat
meanSolarZenith Offset	Float32	Offset for Mean solar zenith angle	Minfloat - Maxfloat
Cell-Level Data Items			
coeff	UInt16 * 3 * 3 * 9 * numLandCells	Array of coefficients (parameters) for BRDF Kernel model having three-terms: isotropic , volumetric, and geometric	0 - (+1.0) Unscaled
blackSkyAlbedo	UInt16 * 3 * 9 * numLandCells	Spectral albedo in the absence of a diffuse component	Scaled unitless; 0 - 65527
whiteSkyAlbedo	UInt16 * 3 * 9 * numLandCells	Spectral albedo in the absence of a direct component, assuming an isotropic diffuse surface	Scaled unitless; 0 - 65527
nbar	UInt16 * 3 * 9 * numLandCells	Nadir BRDF Adjusted Reflectance calculated from BRDF at the mean solar zenith angle	Scaled unitless; 0 - 65527
meanSolarZenith	UInt16 * 3 * numLandCells	Mean solar zenith angle derived from all the valid surface reflectance data (observations)	Scaled radians; 0 - 65527
kernel	UInt8 * 3 * 2 * numLandCells	Array of values indicating which of eight possible kernel types, two volumetric and six geometric, are selected for the BRDF model	0 - 7
spare	3 bit(s) * 3 * numLandCells	[spare quality bits]	n/a
criterion	2 bit(s) * 3 * numLandCells	0 = RMSE Heritage 1 = RMSE 2 = Coeffs Variance 3 = White-sky albedo variance	0 - 3
retrievalQuality	1 bit(s) * 3 * numLandCells	0 = poor 1 = good	0 - 1
inversionType	2 bit(s) * 3 * numLandCells	0 = N/A 1 = full inversion 2 = magnitude inversion 3 = history	0 - 3

Table 38. GridToGrid Land Surface Albedo Input: Land Surface Albedo Lookup Table (VIIRS-LSA-KERNEL-ALBEDO-LUT)

Input	Type/Size	Description	Units/Valid Range
blackSky	Float32 * 8 * 170	Black Sky values for bands M1-M5, M7, M8, M10, M11	Minfloat - Maxfloat
whiteSky	Float32 * 8	White Sky values for bands M1-M5, M7, M8, M10, M11	Minfloat - Maxfloat

Table 39. GridToGrid Land Surface Albedo Input: Land Surface Albedo GridToGrid Processing Coefficients (VIIRS-GridToGrid-LSA-AC-Int)

Input	Type/Size	Description	Units (where applicable) / Valid Range
fullInversionMinCount	Int32	7	0 - 1000
magInversionMinCount	Int32	3	0 – 1000
thresholdRMSELow	Float32	0.1	0.0 – 1000.0
thresholdRMSEHi	Float32	0.3	0.0 – 1000.0
thresholdVarianceLow	Float32	0.75	0.0 – 1000.0
thresholdVarianceHi	Float32	1.25	0.0 – 1000.0
thresholdMaxAlbedoVarianceLow	Float32	1.5	0.0 – 1000.0
thresholdMaxAlbedoVarianceHi	Float32	2.5	0.0 – 1000.0
ndviThreshold	Float32	0.15	0.0 – 1000.0
hkThetaSInterval	Float32	0.00872665	0.0 – 1000.0
hkThetaSMax	Float32	1.4748	0.0 – 1000.0
crownRelHeightParamLISparse	Float64	2.0	0.0 – 1000.0
crownRelShapeParamLISparse	Float64	1.0	0.0 – 1000.0
crownRelHeightParamLIDense	Float64	2.0	0.0 – 1000.0
crownRelShapeParamLIDense	Float64	1.0	0.0 – 1000.0
crownRelShapeParamRoujean	Float64	1.0	0.0 – 1000.0

Table 40. GridToGrid Land Surface Albedo Input: Sinusoidal Map Earth/Land Lookup Table (VIIRS-Grid-SIN-Tiles-Earth-Land-LUT)

Input	Type/Size	Description	Units (where applicable) / Valid Range
classification	UInt8 * 72 * 72	Information for each tile on the Sinusoidal Grid 0 = off the earth 1 = on the earth - not land 3 = on the earth - land	0 - 3

Table 41. GridToGrid Land Surface Albedo Input: Master Land Index Tiles (GridIP-VIIRS-MLI-Tile)

Input	Type/Size	Description	Units (where applicable) / Valid Range
Tile-Level Data Items			
numLandCells	Int32	Number of land cells for this tile	0 - 180000
numLandCells5k	UInt16	Number of 5-km land cells for this tile	0 - 7200
Cell-Level Data Items			
indices	Int32 * 300 * 600	Offset into the indirect-indexed tile product for the cell if land; FILL if water	0 - 179999

Input	Type/Size	Description	Units (where applicable) / Valid Range
indices5k	UInt16 * 60 * 120	Offset into the indirect-indexed tile product for the 5-km cell if land; FILL if water	0 - 7199

2.6.1.2 Outputs

2.6.1.2.1 GridToGran Outputs

Table 42 shows the GridToGran outputs.

Table 42. GridToGran Land Surface Albedo Output: Granulated Land Surface Albedo (VIIRS-GridIP-VIIRS-Land-Surf-Albedo-Mod-Gran)

Input	Type/Size	Description	Units (where applicable) / Valid Range
Pixel-Level Data Items			
coeff	Float32 * 768 * 3200 * 3 * 3 * 9	Array of coefficients (parameters) for BRDF Kernel model having three-terms: isotropic , volumetric, and geometric	0 - 2
kernel	UInt8 * 768 * 3200 * 3 * 2	Array of values indicating which of eight possible kernel types, two volumetric and six geometric, are selected for the BRDF model	0 - 7
spare	3 bit(s) * 768 * 3200 * 3	[spare quality bits]	n/a
criterion	2 bit(s) * 768 * 3200 * 3	0 = RMSE Heritage 1 = RMSE 2 = Coeffs Variance 3 = White-sky albedo variance	0 - 3
retrievalQuality	1 bit(s) * 768 * 3200 * 3	0 = poor 1 = good	0 - 1
inversionType	2 bit(s) * 768 * 3200 * 3	0 = N/A 1 = full inversion 2 = magnitude inversion 3 = history	0 - 3

2.6.1.2.2 GridToGrid Outputs

Tables 43 and 44 show the GridToGrid outputs.

Table 43. GridToGrid Land Surface Albedo Output: BRDF Archetypal GIP Tiles (GridIP-VIIRS-Brdf-Arch-17Day-Tile)

Input	Type/Size	Description	Units (where applicable) / Valid Range
Tile-Level Data Items			
coeffScale	Float32	Scale Factor for coefficients	Minfloat - Maxfloat
coeffOffset	Float32	Offset for coefficients	Minfloat - Maxfloat
Cell-Level Data Items			
updateDate	Int64 * 3 * numLandCells	Update date/time for this cell	IET microseconds; Maxint - Maxint

Input	Type/Size	Description	Units (where applicable) / Valid Range
coeff	UInt16 * 3 * 3 * 9 * numLandCells	Array of coefficients (parameters) for BRDF Kernel model having three-terms: isotropic , volumetric, and geometric	0 - (+1.0) Unscaled
kernel	UInt8 * 3 * 2 * numLandCells	Array of values indicating which of eight possible kernel types, two volumetric and six geometric, are selected for the BRDF model	0 - 255
spare	3 bit(s) * 3 * numLandCells	[spare quality bits]	n/a
criterion	2 bit(s) * 3 * numLandCells	0 = RMSE Heritage 1 = RMSE 2 = Coeffs Variance 3 = White-sky albedo variance	0 - 3
retrievalQuality	1 bit(s) * 3 * numLandCells	0 = poor 1 = good	0 - 1
inversionType	2 bit(s) * 3 * numLandCells	0 = N/A 1 = full inversion 2 = magnitude inversion 3 = history	0 - 3

Table 44. GridToGrid Land Surface Albedo Output: VIIRS Land Surface Albedo GridIP Tiles (GridIP-VIIRS-Land-Surf-Albedo-17Day-Tile)

Input	Type/Size	Description	Units (where applicable) / Valid Range
Tile-Level Data Items			
coeffScale	Float32	Scale Factor for coefficients	Minfloat - Maxfloat
coeffOffset	Float32	Offset for coefficients	Minfloat - Maxfloat
blackSkyAlbedo Scale	Float32	Scale Factor for Black Sky Albedo	Minfloat - Maxfloat
blackSkyAlbedo Offset	Float32	Offset for Black Sky Albedo	Minfloat - Maxfloat
whiteSkyAlbedo Scale	Float32	Scale Factor for White Sky Albedo	Minfloat - Maxfloat
whiteSkyAlbedo Offset	Float32	Offset for White Sky Albedo	Minfloat - Maxfloat
nbarScale	Float32	Scale Factor for NBAR	Minfloat - Maxfloat
nbarOffset	Float32	Offset for NBAR	Minfloat - Maxfloat
meanSolarZenith Scale	Float32	Scale Factor for Mean solar zenith angle	Minfloat - Maxfloat
meanSolarZenith Offset	Float32	Offset for Mean solar zenith angle	Minfloat - Maxfloat
Cell-Level Data Items			
coeff	UInt16 * 3 * 3 * 9 * numLandCells	Array of coefficients (parameters) for BRDF Kernel model having three-terms: isotropic , volumetric, and geometric	0 - (+1.0) Unscaled
blackSkyAlbedo	UInt16 * 3 * 9 * numLandCells	Spectral albedo in the absence of a diffuse component	Scaled unitless; 0 - 65527
whiteSkyAlbedo	UInt16 * 3 * 9 * numLandCells	Spectral albedo in the absence of a direct component, assuming an isotropic diffuse surface	Scaled unitless; 0 - 65527

Input	Type/Size	Description	Units (where applicable) / Valid Range
nbar	UInt16 * 3 * 9 * numLandCells	Nadir BRDF Adjusted Reflectance calculated from BRDF at the mean solar zenith angle	Scaled unitless; 0 - 65527
meanSolarZenith	UInt16 * 3 * numLandCells	Mean solar zenith angle derived from all the valid surface reflectance data (observations)	Scaled radians; 0 - 65527
kernel	UInt8 * 3 * 2 * numLandCells	Array of values indicating which of eight possible kernel types, two volumetric and six geometric, are selected for the BRDF model	0 - 7
spare	3 bit(s) * 3 * numLandCells	[spare quality bits]	n/a
criterion	2 bit(s) * 3 * numLandCells	0 = RMSE Heritage 1 = RMSE 2 = Coeffs Variance 3 = White-sky albedo variance	0 - 3
retrievalQuality	1 bit(s) * 3 * numLandCells	0 = poor 1 = good	0 - 1
inversionType	2 bit(s) * 3 * numLandCells	0 = N/A 1 = full inversion 2 = magnitude inversion 3 = history	0 - 3

2.6.2 Algorithm Processing

2.6.2.1 GridToGran

The GridToGran Land Surface Albedo algorithm employs two different methods using the Area Weight Gran IP at moderate resolution. The ‘qcFlags’ and ‘kernel’ fields are granulated using the Greatest Weight Neighbor method, while the ‘coeff’ field is granulated using full Area Weighting because it contains continuous data.

2.6.2.2 GridToGrid

This algorithm has a separate OAD and is being maintained as such. Please see “Operational Algorithm Description Document for VIIRS Gridded Surface Albedo (GSA) Intermediate Products (IP)”, 474-00078.

2.6.3 Graceful Degradation

2.6.3.1 Graceful Degradation Inputs

There is one case where input graceful degradation is indicated in the GridToGran.

1. An input retrieved for the algorithm had its N_Graceful_Degradation metadata field set to YES (propagation).

2.6.3.2 Graceful Degradation Processing

None.

2.6.3.3 Graceful Degradation Outputs

None.

2.6.4 Exception Handling

This GIP algorithm inherits the Processing (PRO) Common error handling strategy of removing output products when an error path is encountered. This error condition is handled at the level encountered and then the failure condition is forwarded to the calling program. A controller algorithm then removes any output products that it has, and the error condition continues to propagate up in the case of nested controllers.

2.6.5 Data Quality Monitoring

None.

2.6.6 Computational Precision Requirements

None.

2.6.7 Algorithm Support Considerations

None.

2.6.8 Assumptions and Limitations

None.

2.7 Daily Surface Reflectance Description

The Daily Surface Reflectance (DSR) GIP is a collection of valid surface reflectance observations during the day. Up to 17 days worth of collections is available for further processing into the Land Surface Albedo (LSA) GIP. Figure 14 shows the daily surface reflectance interrelationships diagram.

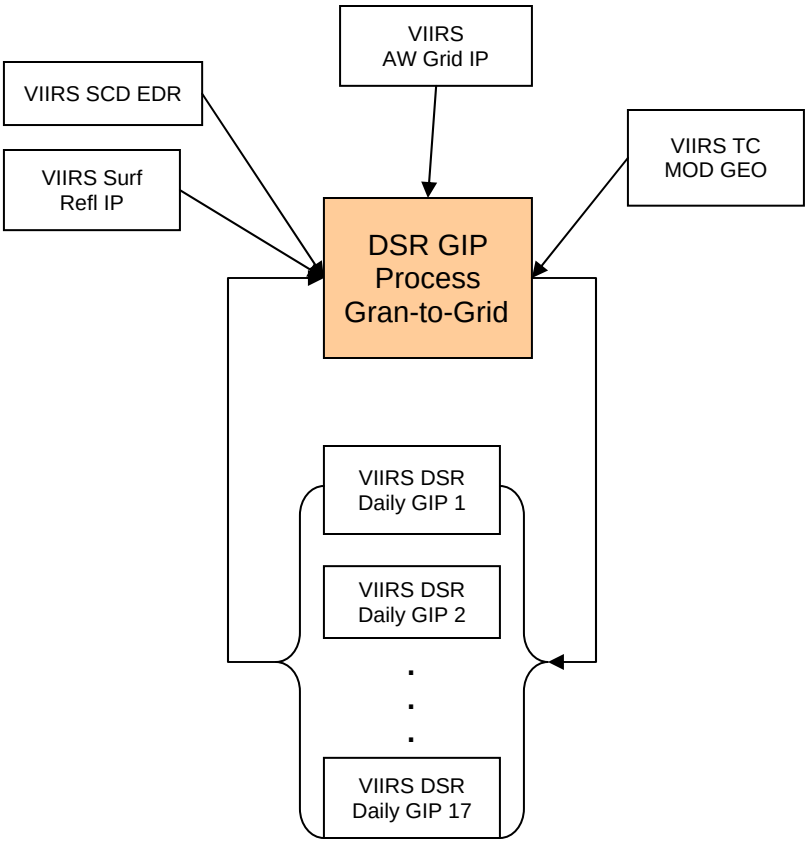

Figure 14. Daily Surface Reflectance Interrelationships Diagram

2.7.1 Interfaces

2.7.1.1 Inputs

2.7.1.1.1 GranToGrid Inputs

Tables 45 through 51 show the GranToGrid inputs.

Table 45. GranToGrid Daily Surface Reflectance Input: VIIRS Area Weight IP Grid Product (VIIRS-Gran-To-Grid-GridIP-AW-GRID-Mod-IP)

Input	Type/Size	Description	Units (where applicable) / Valid Range
Tile-Level Data Items			
tileList	UInt8 * 5184	Array of a flag for each tile on the grid stating if the tile contained cells which were impacted by pixels within the granule footprint 0 = sinTileIdNotRequired 1 = sinTileIdRequired	0 - 1
gridCellCount	UInt32	Total number of cells which were impacted by pixels within the granule footprint	1 - VIIRS_MODERATE_PIXEL_COUNT * .90
Cell-Level Data Items			
tileId	UInt16	Tile ID for the tile which contains this cell	0 - 767
cellRow	UInt16	Cell row within this tile	0 - 3199

Input	Type/Size	Description	Units (where applicable) / Valid Range
cellCol	UInt16	Cell column within this tile	0 - 65000
numPixels	UInt16	Number of pixels which contributed to this cell	1 - 12
[pixel array]	the following three fields are repeated for each pixel		
row	UInt16	Pixel row within the granule	0 - 767
col	UInt16	Pixel column within the granule	0 - 3199
weight	UInt16	Pixel weight	0 - 65000

Table 46. GranToGrid Daily Surface Reflectance Input: VIIRS Surface Reflectance IP (VIIRS-Surf-Refl-IP)

Input	Type/Size	Description	Units (where applicable) / Valid Range
Pixel-Level Data Items			
i1	Float32 * 1536 * 6400	Reflectance data for imagery band 1	0 - 1.5
i2	Float32 * 1536 * 6400	Reflectance data for imagery band 2	0 - 1.5
i3	Float32 * 1536 * 6400	Reflectance data for imagery band 3	0 - 1.5
m1	Float32 * 768 * 3200	Reflectance data for moderate band 1	0 - 1.5
m2	Float32 * 768 * 3200	Reflectance data for moderate band 2	0 - 1.5
m3	Float32 * 768 * 3200	Reflectance data for moderate band 3	0 - 1.5
m4	Float32 * 768 * 3200	Reflectance data for moderate band 4	0 - 1.5
m5	Float32 * 768 * 3200	Reflectance data for moderate band 5	0 - 1.5
m7	Float32 * 768 * 3200	Reflectance data for moderate band 7	0 - 1.5
m8	Float32 * 768 * 3200	Reflectance data for moderate band 8	0 - 1.5
m10	Float32 * 768 * 3200	Reflectance data for moderate band 10	0 - 1.5
m11	Float32 * 768 * 3200	Reflectance data for moderate band 11	0 - 1.5
Cloud Mask Quality	2 bit(s) * 768 * 3200	0 = Poor 1 = Low 2 = Medium 3 = High	0 - 3
Cloud Mask Confidence	2 bit(s) * 768 * 3200	0 = Confident Clear 1 = Probably Clear 2 = Probably Cloudy 3 = Confident Cloudy	0 - 3
Night	1 bit(s) * 768 * 3200	0 = solar zenith <= 85 degrees 1 = solar zenith angle > 85 degrees	0 - 1
Low Sun	1 bit(s) * 768 * 3200	0 = solar zenith <= 70 degrees 1 = solar zenith angle > 70 degrees	0 - 1

Input	Type/Size	Description	Units (where applicable) / Valid Range
Sun Glint Pixel	2 bit(s) * 768 * 3200	0 = None 1 = Geometry Based 2 = Wind Speed Based 3 = Geometry and Wind Based	0 - 3
Land/Water Background Pixel	3 bit(s) * 768 * 3200	0 = Land And Desert 1 = Land No Desert 2 = Inland Water 3 = Sea Water 5 = Coastal	0 - 5
Shadow Detected Pixel	1 bit(s) * 768 * 3200	0 = No 1 = Yes	0 - 1
Non Cloud Obstruction (Heavy Aerosol)	1 bit(s) * 768 * 3200	0 = No 1 = Yes	0 - 1
Thin Cirrus Reflective	1 bit(s) * 768 * 3200	0 = No Cloud 1 = Cloud	0 - 1
Thin Cirrus Emissive	1 bit(s) * 768 * 3200	0 = No Cloud 1 = Cloud	0 - 1
Spare	1 bit(s) * 768 * 3200	[spare quality bits]	n/a
Bad M1 SDR Data Pixel	1 bit(s) * 768 * 3200	0 = No 1 = Yes	0 - 1
Bad M2 SDR Data Pixel	1 bit(s) * 768 * 3200	0 = No 1 = Yes	0 - 1
Bad M3 SDR Data Pixel	1 bit(s) * 768 * 3200	0 = No 1 = Yes	0 - 1
Bad M4 SDR Data Pixel	1 bit(s) * 768 * 3200	0 = No 1 = Yes	0 - 1
Bad M5 SDR Data Pixel	1 bit(s) * 768 * 3200	0 = No 1 = Yes	0 - 1
Bad M7 SDR Data Pixel	1 bit(s) * 768 * 3200	0 = No 1 = Yes	0 - 1
Bad M8 SDR Data Pixel	1 bit(s) * 768 * 3200	0 = No 1 = Yes	0 - 1
Bad M10 SDR Data Pixel	1 bit(s) * 768 * 3200	0 = No 1 = Yes	0 - 1
Bad M11 SDR Data Pixel	1 bit(s) * 768 * 3200	0 = No 1 = Yes	0 - 1
Bad I1 SDR Data Pixel	1 bit(s) * 768 * 3200	0 = No 1 = Yes	0 - 1
Bad I2 SDR Data Pixel	1 bit(s) * 768 * 3200	0 = No 1 = Yes	0 - 1
Bad I3 SDR Data Pixel	1 bit(s) * 768 * 3200	0 = No 1 = Yes	0 - 1
Overall Quality of AOT Pixel	1 bit(s) * 768 * 3200	0 = No 1 = Yes	0 - 1
Missing AOT Input Data Pixel	1 bit(s) * 768 * 3200	0 = No 1 = Yes	0 - 1
Missing AM Input Data Pixel	1 bit(s) * 768 * 3200	0 = No 1 = Yes	0 - 1
Missing WV Input Data Pixel	1 bit(s) * 768 * 3200	0 = No 1 = Yes	0 - 1

Input	Type/Size	Description	Units (where applicable) / Valid Range
Missing OZ Input Data Pixel	1 bit(s) * 768 * 3200	0 = No 1 = Yes	0 - 1
Missing SP Input Data Pixel	1 bit(s) * 768 * 3200	0 = No 1 = Yes	0 - 1
Overall Quality M1 SR Data	1 bit(s) * 768 * 3200	0 = No 1 = Yes	0 - 1
Overall Quality M2 SR Data	1 bit(s) * 768 * 3200	0 = No 1 = Yes	0 - 1
Overall Quality M3 SR Data	1 bit(s) * 768 * 3200	0 = No 1 = Yes	0 - 1
Overall Quality M4 SR Data	1 bit(s) * 768 * 3200	0 = No 1 = Yes	0 - 1
Overall Quality M5 SR Data	1 bit(s) * 768 * 3200	0 = No 1 = Yes	0 - 1
Overall Quality M7 SR Data	1 bit(s) * 768 * 3200	0 = No 1 = Yes	0 - 1
Overall Quality M8 SR Data	1 bit(s) * 768 * 3200	0 = No 1 = Yes	0 - 1
Overall Quality M10 SR Data	1 bit(s) * 768 * 3200	0 = No 1 = Yes	0 - 1
Overall Quality M11 SR Data	1 bit(s) * 768 * 3200	0 = No 1 = Yes	0 - 1
Overall Quality I1 SR Data	1 bit(s) * 768 * 3200	0 = No 1 = Yes	0 - 1
Overall Quality I2 SR Data	1 bit(s) * 768 * 3200	0 = No 1 = Yes	0 - 1
Overall Quality I3 SR Data	1 bit(s) * 768 * 3200	0 = No 1 = Yes	0 - 1
Spare	2 bit(s) * 768 * 3200	[spare quality bits]	n/a

Table 47. GranToGrid Daily Surface Reflectance Input: VIIRS Snow Cover/Depth EDR (VIIRS-SCD-BINARY-SNOW-MAP-FEDR)

Input	Type	Description	Units (where applicable) / Valid Range
Granule-Level Data Items			
scdBinaryMapQuality	UInt8	Overall Quality	Percentage; 0 - 100
scdExclusionSummary	UInt8	Exclusion Summary	Percentage; 0 - 100
Pixel-Level Data Items			
scdBinaryMap	Int8 * 1536 * 6400	0 = Not Snow 1 = Snow	0 - 1
Overall Pixel Quality	2 bit(s) * 1536 * 6400	0 = Green (high) 1 = Yellow (medium) 2 = Red (bad) 3 = Fill (no retrieval)	0 - 3
Input SDR Quality	1 bit(s) * 1536 * 6400	0 = Good 1 = Bad	0 - 1
Cloud Confidence	2 bit(s) * 1536 * 6400	0 = confidently clear 1 = probably clear 2 = probably cloudy 3 = confidently cloudy	0 - 3
Solar Zenith Angle Exclusion	1 bit(s) * 1536 * 6400	0 = No (no exclusion) 1 = Yes (based on a tunable solar zenith angle exclusion threshold)	0 - 1
Aerosol Optical Thickness Exclusion	1 bit(s) * 1536 * 6400	0 = No (no exclusion) 1 = Yes (based on a tunable aerosol optical thickness exclusion threshold)	0 - 1
Snow Fraction Exclusion	1 bit(s) * 1536 * 6400	0 = No (no exclusion) 1 = Yes (based on a tunable snow fraction exclusion thresholds)	0 - 1
Thin Cirrus	1 bit(s) * 1536 * 6400	0 = No 1 = Yes (thin cirrus detected	0 - 1
Cloud Shadow	1 bit(s) * 1536 * 6400	0 = No 1 = Yes	0 - 1
Cloud Phase	2 bit(s) * 1536 * 6400	0 = Clear 1 = Water 2 = Ice 3 = Mixed	0 - 3
Forest	1 bit(s) * 1536 * 6400	0 = No 1 = Yes	0 - 1
Land/Water	2 bit(s) * 1536 * 6400	0 = Land 1 = Coastal 2 = Inland Water 3 = Ocean	0 - 3
Sun Glint	1 bit(s) * 1536 * 6400	0 = No 1 = Yes	0 - 1

Input	Type	Description	Units (where applicable) / Valid Range
Thermal Threshold Exceeded	1 bit(s) * 1536 * 6400	0 = No 1 = Yes (based on a tunable temperature threshold)	0 - 1
NDSI Quality	1 bit(s) * 1536 * 6400	0 = Good 1 = Bad	0 - 1
NDVI Quality	1 bit(s) * 1536 * 6400	0 = Good 1 = Bad	0 - 1
Fire	1 bit(s) * 1536 * 6400	0 = No 1 = Yes	0 - 1
Spare	4 bit(s) * 1536 * 6400	[spare quality bits]	n/a

Table 48. GranToGrid Daily Surface Reflectance Input: VIIRS Moderate Terrain Corrected Geolocation (VIIRS-MOD-RGEO-TC)

Input	Type	Description	Units (where applicable) / Valid Range
Granule-Level Data Items			
mode	UInt8	0 = Night 1 = Day 2 = Mixed	0 - 2
act_scans	Int32	Actual number of scans for this granule	0 - Max_scans
Scan-Level Data Items			
scanStartTime	Int64 * 48	Start time for the scan	IET microseconds; 0 - 1.00E+38
scanMidTime	Int64 * 48	Mid time for the scan	IET microseconds; 0 - 1.00E+38
scPosition	Float32 * 48 * 3	Spacecraft Position	meters; -7.46E+06 - 7.40E+06
scVelocity	Float32 * 48 * 3	Spacecraft Velocity	meters/sec; -6600 - 6600
scAttitude	Float32 * 48 * 3	Spacecraft Attitude	arcsec; -450 - 450
scSunZen	Float32 * 48	Solar Zenith Angle	Radians; 0 - pi/2
scSunAzm	Float32 * 48	Solar Azimuth Angle	Radians; (-pi/2) - pi/2
scan_mode	UInt8 * 48	0 = Night 1 = Day	0 - 1
Interpolation Stage	2 bit(s) * 48	0 = Nominal - E&A data available 1 = Missing Data <= Small Gap 2 = Small Gap < Missing Data <= Granule Boundary 3 = Missing Data > Granule Boundary	0 - 3
HAM Impulse flag	2 bit(s) * 48	0: Good data – all encoder data is valid 1: Bad data – either HAM encoders, RTA encoders or both corrupted for the entire scan 2: Degraded data – either HAM encoders, RTA encoders or both are corrupted within the scan. 3: Missing data – Missing encoder data for the scan (dropped engineering packets)	0 - 3
Above South Atlantic Anomaly	1 bit(s) * 48	0 = False 1 = True	0 - 1
Solar Eclipse	1 bit(s) * 48	0 = False 1 = True	0 - 1
Spare	2 bit(s) * 48	[spare quality bits]	n/a
Pixel-Level Data Items			
lat	Float32 * 768 * 3200	Latitude	Radians; (-pi/2) - pi/2
lon	Float32 * 768 * 3200	Longitude	Radians; (-pi) - pi
sunzen	Float32 * 768 * 3200	Solar Zenith Angle	Radians; 0 - pi/2

Input	Type	Description	Units (where applicable) / Valid Range
sunazm	Float32 * 768 * 3200	Solar Azimuth Angle	Radians; (-pi/2) - pi/2
satzen	Float32 * 768 * 3200	Sensor Zenith Angle	Radians; 0 - pi/2
satazm	Float32 * 768 * 3200	Sensor Azimuth Angle	Radians; 0 - pi
height	Float32 * 768 * 3200	Height	meters; -400 - 10000
range	Float32 * 768 * 3200	Range	meters; 800000 - 2000000
Invalid Input Data	1 bit(s) * 768 * 3200	0 = Valid 1 = Invalid	0 - 1
Bad Pointing	1 bit(s) * 768 * 3200	0 = Good Pointing 1 = Bad Pointing	0 - 1
Bad Terrain	1 bit(s) * 768 * 3200	0 = Good Terrain 1 = Bad Terrain	0 - 1
Invalid Solar Angles	1 bit(s) * 768 * 3200	0 = Valid angles 1 = Invalid angles	0 - 1
Spare	4 bit(s) * 768 * 3200	[spare quality bits]	n/a

Table 49. GranToGrid Daily Surface Reflectance Input: Daily Surface Reflectance GIP Tiles (GridIP-VIIRS-Daily-Surf-Refl-Daily-Tile)

Input	Type/Size	Description	Units (where applicable) / Valid Range
Tile-Level Data Items			
maxObs	Int32	Maximum number of observations for this tile	0 - 15
surfReflectScale	Float32	Scale factor for Surface Reflectance	Minfloat - Maxfloat
surfReflectOffset	Float32	Offset for Surface Reflectance	Minfloat - Maxfloat
solZenAngScale	Float32	Scale factor for Solar Zenith Angle	Minfloat - Maxfloat
solZenAngOffset	Float32	Offset for Solar Zenith Angle	Minfloat - Maxfloat
senZenAngScale	Float32	Scale factor for Sensor Zenith Angle	Minfloat - Maxfloat
senZenAngOffset	Float32	Offset for Sensor Zenith Angle	Minfloat - Maxfloat
relAziAngScale	Float32	Scale factor for Relative Azimuth Angle	Minfloat - Maxfloat
relAziAngOffset	Float32	Offset for Relative Azimuth Angle	Minfloat - Maxfloat
Cell-Level Data Items			
surfReflect	UInt16 * 9 * 15 * numLandCells	Surface Reflectance	0 - 65527
solZenAng	UInt16 * 15 * numLandCells	Solar Zenith Angle	Scaled Radians; 0 - 65527
senZenAng	UInt16 * 15 * numLandCells	Sensor Zenith Angle	Scaled Radians; 0 - 65527
relAziAng	UInt16 * 15 * numLandCells	Relative Azimuth Angle	Scaled Radians; 0 - 65527
numOfObs	UInt8 * numLandCells	Number of recorded observations for this cell	0 - 15

Input	Type/Size	Description	Units (where applicable) / Valid Range
Cloud Mask Quality	2 bit(s) * 15 * numLandCells	0 = Poor 1 = Low 2 = Medium 3 = High	0 - 3
Cloud Detection And Confidence	2 bit(s) * 15 * numLandCells	0 = Confident Cloudy 1 = Probably Cloudy 2 = Confident Clear 3 = Probably Clear	0 - 3
Day/Night	1 bit(s) * 15 * numLandCells	0 = Night 1 = Day	0 - 1
Low Sun	1 bit(s) * 15 * numLandCells	0 = No Low Sun 1 = Low Sun	0 - 1
Sun Glint	2 bit(s) * 15 * numLandCells	0 = None 1 = Geometry Based 2 = Wind Speed Based 3 = Geometry and Wind Based	0 - 3
Land/Water Background	3 bit(s) * 15 * numLandCells	0 = Land And Desert 1 = Land No Desert 2 = Inland Water 3 = Sea Water 5 = Coastal	0 - 5
Shadow Detected	1 bit(s) * 15 * numLandCells	0 = No 1 = Yes	0 - 1
Non Cloud Obstruction (Heavy Aerosol)	1 bit(s) * 15 * numLandCells	0 = No 1 = Yes	0 - 1
Fire Detected (Cloud Mask)	1 bit(s) * 15 * numLandCells	0 = No 1 = Yes	0 - 1
Thin Cirrus (Solar RM9)	1 bit(s) * 15 * numLandCells	0 = No Cloud 1 = Cloud	0 - 1
Thin Cirrus IR	1 bit(s) * 15 * numLandCells	0 = No Cloud 1 = Cloud	0 - 1
Bad M1 SDR Data	1 bit(s) * 15 * numLandCells	0 = No 1 = Yes	0 - 1
Bad M2 SDR Data	1 bit(s) * 15 * numLandCells	0 = No 1 = Yes	0 - 1
Bad M3 SDR Data	1 bit(s) * 15 * numLandCells	0 = No 1 = Yes	0 - 1
Bad M4 SDR Data	1 bit(s) * 15 * numLandCells	0 = No 1 = Yes	0 - 1
Bad M5 SDR Data	1 bit(s) * 15 * numLandCells	0 = No 1 = Yes	0 - 1
Bad M7 SDR Data	1 bit(s) * 15 * numLandCells	0 = No 1 = Yes	0 - 1
Bad M8 SDR Data	1 bit(s) * 15 * numLandCells	0 = No 1 = Yes	0 - 1
Bad M10 SDR Data	1 bit(s) * 15 * numLandCells	0 = No 1 = Yes	0 - 1
Bad M11 SDR Data	1 bit(s) * 15 * numLandCells	0 = No 1 = Yes	0 - 1
Bad I1 SDR Data	1 bit(s) * 15 * numLandCells	0 = No 1 = Yes	0 - 1
Bad I2 SDR Data	1 bit(s) * 15 * numLandCells	0 = No 1 = Yes	0 - 1

Input	Type/Size	Description	Units (where applicable) / Valid Range
Bad I3 SDR Data	1 bit(s) * 15 * numLandCells	0 = No 1 = Yes	0 - 1
Overall Quality of AOT	1 bit(s) * 15 * numLandCells	0 = No 1 = Yes	0 - 1
Missing AOT Input Data	1 bit(s) * 15 * numLandCells	0 = No 1 = Yes	0 - 1
Missing AM Input Data	1 bit(s) * 15 * numLandCells	0 = No 1 = Yes	0 - 1
Missing PW Input Data	1 bit(s) * 15 * numLandCells	0 = No 1 = Yes	0 - 1
Missing OZ Input Data	1 bit(s) * 15 * numLandCells	0 = No 1 = Yes	0 - 1
Missing SP Input Data	1 bit(s) * 15 * numLandCells	0 = No 1 = Yes	0 - 1
Overall Quality M1 SR Data	1 bit(s) * 15 * numLandCells	0 = No 1 = Yes	0 - 1
Overall Quality M2 SR Data	1 bit(s) * 15 * numLandCells	0 = No 1 = Yes	0 - 1
Overall Quality M3 SR Data	1 bit(s) * 15 * numLandCells	0 = No 1 = Yes	0 - 1
Overall Quality M4 SR Data	1 bit(s) * 15 * numLandCells	0 = No 1 = Yes	0 - 1
Overall Quality M5 SR Data	1 bit(s) * 15 * numLandCells	0 = No 1 = Yes	0 - 1
Overall Quality M7 SR Data	1 bit(s) * 15 * numLandCells	0 = No 1 = Yes	0 - 1
Overall Quality M8 SR Data	1 bit(s) * 15 * numLandCells	0 = No 1 = Yes	0 - 1
Overall Quality M10 SR Data	1 bit(s) * 15 * numLandCells	0 = No 1 = Yes	0 - 1
Overall Quality M11 SR Data	1 bit(s) * 15 * numLandCells	0 = No 1 = Yes	0 - 1
Overall Quality I1 SR Data	1 bit(s) * 15 * numLandCells	0 = No 1 = Yes	0 - 1
Overall Quality I2 SR Data	1 bit(s) * 15 * numLandCells	0 = No 1 = Yes	0 - 1
Overall Quality I3 SR Data	1 bit(s) * 15 * numLandCells	0 = No 1 = Yes	0 - 1
Snow/Ice	1 bit(s) * 15 * numLandCells	0 = No Snow/Ice 1 = Snow/Ice	0 - 1
Spare	1 bit(s) * 15 * numLandCells	[spare quality bits]	n/a

Table 50. GranToGrid Daily Surface Reflectance Input: Sinusoidal Map Earth/Land Lookup Table (VIIRS-Grid-SIN-Tiles-Earth-Land-LUT)

Input	Type/Size	Description	Units (where applicable) / Valid Range
classification	UInt8 * 72 * 72	Information for each tile on the Sinusoidal Grid 0 = off the earth 1 = on the earth - not land 3 = on the earth - land	0 - 3

Table 51. GranToGrid Daily Surface Reflectance Input: Master Land Index Tiles (GridIP-VIIRS-MLI-Tile)

Input	Type/Size	Description	Units (where applicable) / Valid Range
Tile-Level Data Items			
numLandCells	Int32	Number of land cells for this tile	0 - 180000
numLandCells5k	UInt16	Number of 5-km land cells for this tile	0 - 7200
Cell-Level Data Items			
indices	Int32 * 300 * 600	Offset into the indirect-indexed tile product for the cell if land; FILL if water	0 - 179999
indices5k	UInt16 * 60 * 120	Offset into the indirect-indexed tile product for the 5-km cell if land; FILL if water	0 - 7199

2.7.1.1.2 GridToGrid Inputs

Tables 52 through 54 show the GridToGrid inputs.

Table 52. GridToGrid Daily Surface Reflectance Input: Daily Surface Reflectance GIP Template Tiles (GridIP-VIIRS-Daily-Surf-Refl-Template-Daily-Tile)

Input	Type/Size	Description	Units (where applicable) / Valid Range
Tile-Level Data Items			
maxObs	Int32	Maximum number of observations for this tile	0 - 15
surfReflectScale	Float32	Scale factor for Surface Reflectance	Minfloat - Maxfloat
surfReflectOffset	Float32	Offset for Surface Reflectance	Minfloat - Maxfloat
solZenAngScale	Float32	Scale factor for Solar Zenith Angle	Minfloat - Maxfloat
solZenAngOffset	Float32	Offset for Solar Zenith Angle	Minfloat - Maxfloat
senZenAngScale	Float32	Scale factor for Sensor Zenith Angle	Minfloat - Maxfloat
senZenAngOffset	Float32	Offset for Sensor Zenith Angle	Minfloat - Maxfloat
relAziAngScale	Float32	Scale factor for Relative Azimuth Angle	Minfloat - Maxfloat
relAziAngOffset	Float32	Offset for Relative Azimuth Angle	Minfloat - Maxfloat
Cell-Level Data Items			
surfReflect	UInt16 * 15 * 9 * numLandCells	Surface Reflectance	0 - 65527
solZenAng	UInt16 * 15 * numLandCells	Solar Zenith Angle	Scaled Radians; 0 - 65527
senZenAng	UInt16 * 15 * numLandCells	Sensor Zenith Angle	Scaled Radians; 0 - 65527
relAziAng	UInt16 * 15 * numLandCells	Relative Azimuth Angle	Scaled Radians; 0 - 65527
numOfObs	UInt8 * numLandCells	Number of recorded observations for this cell	0 - 15
Cloud Mask Quality	2 bit(s) * 15 * numLandCells	0 = Poor 1 = Low 2 = Medium 3 = High	0 - 3

Input	Type/Size	Description	Units (where applicable) / Valid Range
Cloud Detection And Confidence	2 bit(s) * 15 * numLandCells	0 = Confident Cloudy 1 = Probably Cloudy 2 = Confident Clear 3 = Probably Clear	0 - 3
Day/Night	1 bit(s) * 15 * numLandCells	0 = Night 1 = Day	0 - 1
Low Sun	1 bit(s) * 15 * numLandCells	0 = No Low Sun 1 = Low Sun	0 - 1
Sun Glint	2 bit(s) * 15 * numLandCells	0 = None 1 = Geometry Based 2 = Wind Speed Based 3 = Geometry and Wind Based	0 - 3
Land/Water Background	3 bit(s) * 15 * numLandCells	0 = Land And Desert 1 = Land No Desert 2 = Inland Water 3 = Sea Water 5 = Coastal	0 - 5
Shadow Detected	1 bit(s) * 15 * numLandCells	0 = No 1 = Yes	0 - 1
Non Cloud Obstruction (Heavy Aerosol)	1 bit(s) * 15 * numLandCells	0 = No 1 = Yes	0 - 1
Fire Detected (Cloud Mask)	1 bit(s) * 15 * numLandCells	0 = No 1 = Yes	0 - 1
Thin Cirrus (Solar RM9)	1 bit(s) * 15 * numLandCells	0 = No Cloud 1 = Cloud	0 - 1
Thin Cirrus IR	1 bit(s) * 15 * numLandCells	0 = No Cloud 1 = Cloud	0 - 1
Bad M1 SDR Data	1 bit(s) * 15 * numLandCells	0 = No 1 = Yes	0 - 1
Bad M2 SDR Data	1 bit(s) * 15 * numLandCells	0 = No 1 = Yes	0 - 1
Bad M3 SDR Data	1 bit(s) * 15 * numLandCells	0 = No 1 = Yes	0 - 1
Bad M4 SDR Data	1 bit(s) * 15 * numLandCells	0 = No 1 = Yes	0 - 1
Bad M5 SDR Data	1 bit(s) * 15 * numLandCells	0 = No 1 = Yes	0 - 1
Bad M7 SDR Data	1 bit(s) * 15 * numLandCells	0 = No 1 = Yes	0 - 1
Bad M8 SDR Data	1 bit(s) * 15 * numLandCells	0 = No 1 = Yes	0 - 1
Bad M10 SDR Data	1 bit(s) * 15 * numLandCells	0 = No 1 = Yes	0 - 1
Bad M11 SDR Data	1 bit(s) * 15 * numLandCells	0 = No 1 = Yes	0 - 1
Bad I1 SDR Data	1 bit(s) * 15 * numLandCells	0 = No 1 = Yes	0 - 1
Bad I2 SDR Data	1 bit(s) * 15 * numLandCells	0 = No 1 = Yes	0 - 1
Bad I3 SDR Data	1 bit(s) * 15 * numLandCells	0 = No 1 = Yes	0 - 1

Input	Type/Size	Description	Units (where applicable) / Valid Range
Overall Quality of AOT	1 bit(s) * 15 * numLandCells	0 = No 1 = Yes	0 - 1
Missing AOT Input Data	1 bit(s) * 15 * numLandCells	0 = No 1 = Yes	0 - 1
Missing AM Input Data	1 bit(s) * 15 * numLandCells	0 = No 1 = Yes	0 - 1
Missing PW Input Data	1 bit(s) * 15 * numLandCells	0 = No 1 = Yes	0 - 1
Missing OZ Input Data	1 bit(s) * 15 * numLandCells	0 = No 1 = Yes	0 - 1
Missing SP Input Data	1 bit(s) * 15 * numLandCells	0 = No 1 = Yes	0 - 1
Overall Quality M1 SR Data	1 bit(s) * 15 * numLandCells	0 = No 1 = Yes	0 - 1
Overall Quality M2 SR Data	1 bit(s) * 15 * numLandCells	0 = No 1 = Yes	0 - 1
Overall Quality M3 SR Data	1 bit(s) * 15 * numLandCells	0 = No 1 = Yes	0 - 1
Overall Quality M4 SR Data	1 bit(s) * 15 * numLandCells	0 = No 1 = Yes	0 - 1
Overall Quality M5 SR Data	1 bit(s) * 15 * numLandCells	0 = No 1 = Yes	0 - 1
Overall Quality M7 SR Data	1 bit(s) * 15 * numLandCells	0 = No 1 = Yes	0 - 1
Overall Quality M8 SR Data	1 bit(s) * 15 * numLandCells	0 = No 1 = Yes	0 - 1
Overall Quality M10 SR Data	1 bit(s) * 15 * numLandCells	0 = No 1 = Yes	0 - 1
Overall Quality M11 SR Data	1 bit(s) * 15 * numLandCells	0 = No 1 = Yes	0 - 1
Overall Quality I1 SR Data	1 bit(s) * 15 * numLandCells	0 = No 1 = Yes	0 - 1
Overall Quality I2 SR Data	1 bit(s) * 15 * numLandCells	0 = No 1 = Yes	0 - 1
Overall Quality I3 SR Data	1 bit(s) * 15 * numLandCells	0 = No 1 = Yes	0 - 1
Snow/Ice	1 bit(s) * 15 * numLandCells	0 = No Snow/Ice 1 = Snow/Ice	0 - 1
Spare	1 bit(s) * 15 * numLandCells	[spare quality bits]	n/a

Table 53. GridToGrid Daily Surface Reflectance Input: Sinusoidal Map Earth/Land Lookup Table (VIIRS-Grid-SIN-Tiles-Earth-Land-LUT)

Input	Type/Size	Description	Units (where applicable) / Valid Range
Classification	UInt8 * 72 * 72	Information for each tile on the Sinusoidal Grid 0 = off the earth 1 = on the earth - not land 3 = on the earth - land	0 - 3

Table 54. GridToGrid Daily Surface Reflectance Input: Master Land Index Tiles (GridIP-VIIRS-MLI-Tile)

Input	Type/Size	Description	Units (where applicable) / Valid Range
Tile-Level Data Items			
numLandCells	Int32	Number of land cells for this tile	0 - 180000
numLandCells5k	UInt16	Number of 5-km land cells for this tile	0 - 7200
Cell-Level Data Items			
indices	Int32 * 300 * 600	Offset into the indirect-indexed tile product for the cell if land; FILL if water	0 - 179999
indices5k	UInt16 * 60 * 120	Offset into the indirect-indexed tile product for the 5-km cell if land; FILL if water	0 - 7199

2.7.1.2 Outputs (GranToGrid and GridToGrid)

Table 55 shows the GranToGrid and GridToGrid outputs.

Table 55. GranToGrid and GridToGrid Daily Surface Reflectance Output: Daily Surface Reflectance GIP Tiles (GridIP-VIIRS-Daily-Surf-Refl-Daily-Tile)

Input	Type/Size	Description	Units (where applicable) / Valid Range
Tile-Level Data Items			
maxObs	Int32	Maximum number of observations for this tile	0 - 15
surfReflectScale	Float32	Scale factor for Surface Reflectance	Minfloat - Maxfloat
surfReflectOffset	Float32	Offset for Surface Reflectance	Minfloat - Maxfloat
solZenAngScale	Float32	Scale factor for Solar Zenith Angle	Minfloat - Maxfloat
solZenAngOffset	Float32	Offset for Solar Zenith Angle	Minfloat - Maxfloat
senZenAngScale	Float32	Scale factor for Sensor Zenith Angle	Minfloat - Maxfloat
senZenAngOffset	Float32	Offset for Sensor Zenith Angle	Minfloat - Maxfloat
relAziAngScale	Float32	Scale factor for Relative Azimuth Angle	Minfloat - Maxfloat
relAziAngOffset	Float32	Offset for Relative Azimuth Angle	Minfloat - Maxfloat
Cell-Level Data Items			
surfReflect	UInt16 * 15 * 9 * numLandCells	Surface Reflectance	0 - 65527
solZenAng	UInt16 * 15 * numLandCells	Solar Zenith Angle	Scaled Radians; 0 - 65527
senZenAng	UInt16 * 15 * numLandCells	Sensor Zenith Angle	Scaled Radians; 0 - 65527
relAziAng	UInt16 * 15 * numLandCells	Relative Azimuth Angle	Scaled Radians; 0 - 65527
numOfObs	UInt8 * numLandCells	Number of recorded observations for this cell	0 - 15
Cloud Mask Quality	2 bit(s) * 15 * numLandCells	0 = Poor 1 = Low 2 = Medium 3 = High	0 - 3

Input	Type/Size	Description	Units (where applicable) / Valid Range
Cloud Detection And Confidence	2 bit(s) * 15 * numLandCells	0 = Confident Cloudy 1 = Probably Cloudy 2 = Confident Clear 3 = Probably Clear	0 - 3
Day/Night	1 bit(s) * 15 * numLandCells	0 = Night 1 = Day	0 - 1
Low Sun	1 bit(s) * 15 * numLandCells	0 = No Low Sun 1 = Low Sun	0 - 1
Sun Glint	2 bit(s) * 15 * numLandCells	0 = None 1 = Geometry Based 2 = Wind Speed Based 3 = Geometry and Wind Based	0 - 3
Land/Water Background	3 bit(s) * 15 * numLandCells	0 = Land And Desert 1 = Land No Desert 2 = Inland Water 3 = Sea Water 5 = Coastal	0 - 5
Shadow Detected	1 bit(s) * 15 * numLandCells	0 = No 1 = Yes	0 - 1
Non Cloud Obstruction (Heavy Aerosol)	1 bit(s) * 15 * numLandCells	0 = No 1 = Yes	0 - 1
Fire Detected (Cloud Mask)	1 bit(s) * 15 * numLandCells	0 = No 1 = Yes	0 - 1
Thin Cirrus (Solar RM9)	1 bit(s) * 15 * numLandCells	0 = No Cloud 1 = Cloud	0 - 1
Thin Cirrus IR	1 bit(s) * 15 * numLandCells	0 = No Cloud 1 = Cloud	0 - 1
Bad M1 SDR Data	1 bit(s) * 15 * numLandCells	0 = No 1 = Yes	0 - 1
Bad M2 SDR Data	1 bit(s) * 15 * numLandCells	0 = No 1 = Yes	0 - 1
Bad M3 SDR Data	1 bit(s) * 15 * numLandCells	0 = No 1 = Yes	0 - 1
Bad M4 SDR Data	1 bit(s) * 15 * numLandCells	0 = No 1 = Yes	0 - 1
Bad M5 SDR Data	1 bit(s) * 15 * numLandCells	0 = No 1 = Yes	0 - 1
Bad M7 SDR Data	1 bit(s) * 15 * numLandCells	0 = No 1 = Yes	0 - 1
Bad M8 SDR Data	1 bit(s) * 15 * numLandCells	0 = No 1 = Yes	0 - 1
Bad M10 SDR Data	1 bit(s) * 15 * numLandCells	0 = No 1 = Yes	0 - 1
Bad M11 SDR Data	1 bit(s) * 15 * numLandCells	0 = No 1 = Yes	0 - 1
Bad I1 SDR Data	1 bit(s) * 15 * numLandCells	0 = No 1 = Yes	0 - 1
Bad I2 SDR Data	1 bit(s) * 15 * numLandCells	0 = No 1 = Yes	0 - 1
Bad I3 SDR Data	1 bit(s) * 15 * numLandCells	0 = No 1 = Yes	0 - 1

Input	Type/Size	Description	Units (where applicable) / Valid Range
Overall Quality of AOT	1 bit(s) * 15 * numLandCells	0 = No 1 = Yes	0 - 1
Missing AOT Input Data	1 bit(s) * 15 * numLandCells	0 = No 1 = Yes	0 - 1
Missing AM Input Data	1 bit(s) * 15 * numLandCells	0 = No 1 = Yes	0 - 1
Missing PW Input Data	1 bit(s) * 15 * numLandCells	0 = No 1 = Yes	0 - 1
Missing OZ Input Data	1 bit(s) * 15 * numLandCells	0 = No 1 = Yes	0 - 1
Missing SP Input Data	1 bit(s) * 15 * numLandCells	0 = No 1 = Yes	0 - 1
Overall Quality M1 SR Data	1 bit(s) * 15 * numLandCells	0 = No 1 = Yes	0 - 1
Overall Quality M2 SR Data	1 bit(s) * 15 * numLandCells	0 = No 1 = Yes	0 - 1
Overall Quality M3 SR Data	1 bit(s) * 15 * numLandCells	0 = No 1 = Yes	0 - 1
Overall Quality M4 SR Data	1 bit(s) * 15 * numLandCells	0 = No 1 = Yes	0 - 1
Overall Quality M5 SR Data	1 bit(s) * 15 * numLandCells	0 = No 1 = Yes	0 - 1
Overall Quality M7 SR Data	1 bit(s) * 15 * numLandCells	0 = No 1 = Yes	0 - 1
Overall Quality M8 SR Data	1 bit(s) * 15 * numLandCells	0 = No 1 = Yes	0 - 1
Overall Quality M10 SR Data	1 bit(s) * 15 * numLandCells	0 = No 1 = Yes	0 - 1
Overall Quality M11 SR Data	1 bit(s) * 15 * numLandCells	0 = No 1 = Yes	0 - 1
Overall Quality I1 SR Data	1 bit(s) * 15 * numLandCells	0 = No 1 = Yes	0 - 1
Overall Quality I2 SR Data	1 bit(s) * 15 * numLandCells	0 = No 1 = Yes	0 - 1
Overall Quality I3 SR Data	1 bit(s) * 15 * numLandCells	0 = No 1 = Yes	0 - 1
Snow/Ice	1 bit(s) * 15 * numLandCells	0 = No Snow/Ice 1 = Snow/Ice	0 - 1
Spare	1 bit(s) * 15 * numLandCells	[spare quality bits]	n/a

2.7.2 Algorithm Processing

2.7.2.1 GranToGrid

The GranToGrid DSR algorithm uses the Area Weight Calculation IP to perform updates to daily GIP tiles with data from good observations. The number of valid maximum observations that can be stored in a day range from 2 to 15 based on the latitudinal region of the tile. Once the maximum number of observations has been reached, additional observations are discarded.

2.7.2.2 GridToGrid

The GridToGrid DSR Initialization algorithm uses a template tile from a template GIP to initialize the DSR tiles for use in GranToGrid processing for the new daily period. It is run every day for a specified range of tiles being dispatched one tile at a time. For any given tile ID, the DSR template tile and the DSR tile are the exact same format. The template tile is seeded in DMS by ING. This algorithm copies the template tile for use in its output, thus retaining the template tile in DMS.

2.7.3 Graceful Degradation

2.7.3.1 Graceful Degration Inputs

None.

2.7.3.2 Graceful Degradation Processing

None.

2.7.3.3 Graceful Degradation Outputs

None.

2.7.4 Exception Handling

This GIP algorithm inherits the Processing (PRO) Common error handling strategy of removing output products when an error path is encountered. This error condition is handled at the level encountered and then the failure condition is forwarded to the calling program. A controller algorithm then removes any output products that it has, and the error condition continues to propagate up in the case of nested controllers.

2.7.5 Data Quality Monitoring

None.

2.7.6 Computational Precision Requirements

None.

2.7.7 Algorithm Support Considerations

None.

2.7.8 Assumptions and Limitations

None.

2.8 Monthly SR/BT/VI Description

The Monthly Surface Reflectance, Brightness Temperature, and Vegetative Index GIPs are used to create the QST GIP, as shown in Figure 15. During the month, data (surface reflectances, brightness temperatures and TOC NDVI) from the pixels with the two highest

Check the JPSS MIS Server at https://jpssmis.gsfc.nasa.gov/frontmenu_dsp.cfm to verify that this is the correct version prior to use

NDVI values are kept. At the end of the month, the data associated with the pixel closest to nadir is selected for the final product (post compositing data reduction).

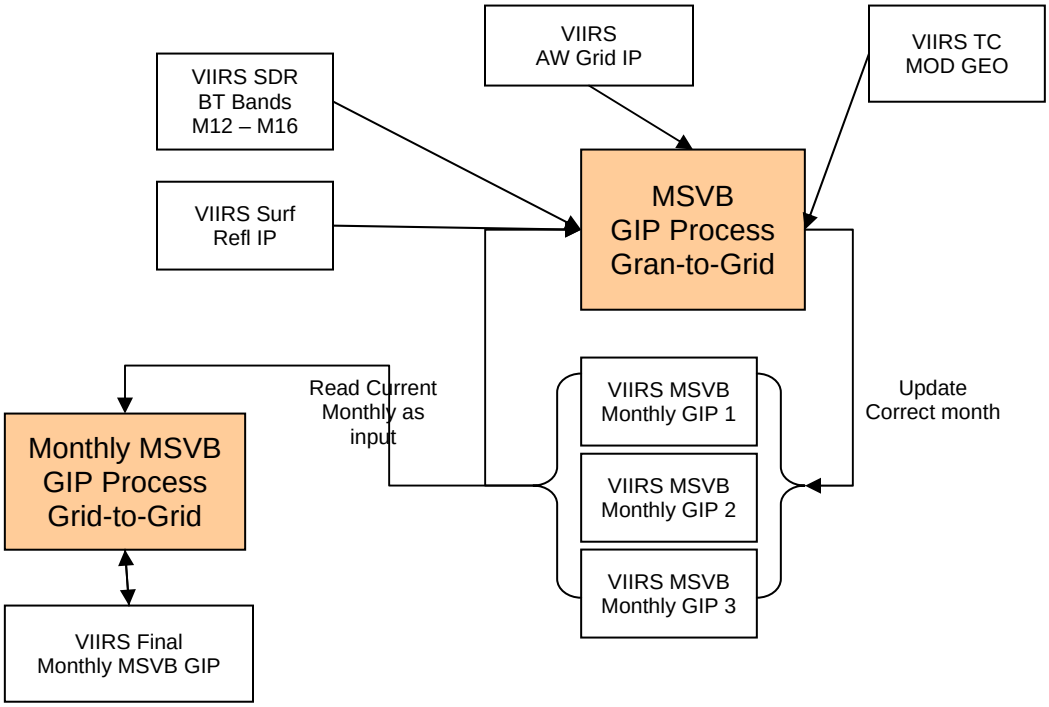

Figure 15. Monthly Surface Reflectance / Brightness Temperature / Vegetation Index Interrelationships Diagram

2.8.1 Interfaces

2.8.1.1 Inputs

2.8.1.1.1 GranToGrid Inputs

Tables 56 through 65 show the GranToGrid inputs.

Table 56. GranToGrid Monthly Surface Reflectance / Brightness Temperature / Vegetation Index Input: VIIRS Area Weight IP Grid Product (VIIRS-Gran-To-Grid-GridIP-AW-GRID-Mod-IP)

Input	Type/Size	Description	Units (where applicable) / Valid Range
Tile-Level Data Items			
tileList	UInt8 * 5184	Array of a flag for each tile on the grid stating if the tile contained cells which were impacted by pixels within the granule footprint 0 = sinTileIdNotRequired 1 = sinTileIdRequired	0 - 1
gridCellCount	UInt32	Total number of cells which were impacted by pixels within the granule footprint	1 - VIIRS_MODERATE_PIXEL_COUNT * .90

Input	Type/Size	Description	Units (where applicable) / Valid Range
Cell-Level Data Items			
tileId	UInt16	Tile ID for the tile which contains this cell	0 - 767
cellRow	UInt16	Cell row within this tile	0 - 3199
cellCol	UInt16	Cell column within this tile	0 - 65000
numPixels	UInt16	Number of pixels which contributed to this cell	1 - 12
[pixel array]	the following three fields are repeated for each pixel		
row	UInt16	Pixel row within the granule	0 - 767
col	UInt16	Pixel column within the granule	0 - 3199
weight	UInt16	Pixel weight	0 - 65000

Table 57. GranToGrid Monthly Surface Reflectance / Brightness Temperature / Vegetation Index Input: VIIRS Surface Reflectance IP (VIIRS-Surf-Refl-IP)

Input	Type/Size	Description	Units (where applicable) / Valid Range
Pixel-Level Data Items			
i1	Float32 * 1536 * 6400	Reflectance data for imagery band 1	0 - 1.5
i2	Float32 * 1536 * 6400	Reflectance data for imagery band 2	0 - 1.5
i3	Float32 * 1536 * 6400	Reflectance data for imagery band 3	0 - 1.5
m1	Float32 * 768 * 3200	Reflectance data for moderate band 1	0 - 1.5
m2	Float32 * 768 * 3200	Reflectance data for moderate band 2	0 - 1.5
m3	Float32 * 768 * 3200	Reflectance data for moderate band 3	0 - 1.5
m4	Float32 * 768 * 3200	Reflectance data for moderate band 4	0 - 1.5
m5	Float32 * 768 * 3200	Reflectance data for moderate band 5	0 - 1.5
m7	Float32 * 768 * 3200	Reflectance data for moderate band 7	0 - 1.5
m8	Float32 * 768 * 3200	Reflectance data for moderate band 8	0 - 1.5
m10	Float32 * 768 * 3200	Reflectance data for moderate band 10	0 - 1.5
m11	Float32 * 768 * 3200	Reflectance data for moderate band 11	0 - 1.5
Cloud Mask Quality	2 bit(s) * 768 * 3200	0 = Poor 1 = Low 2 = Medium 3 = High	0 - 3
Cloud Mask Confidence	2 bit(s) * 768 * 3200	0 = Confident Clear 1 = Probably Clear 2 = Probably Cloudy 3 = Confident Cloudy	0 - 3

Input	Type/Size	Description	Units (where applicable) / Valid Range
Night	1 bit(s) * 768 * 3200	0 = solar zenith <= 85 degrees 1 = solar zenith angle > 85 degrees	0 - 1
Low Sun	1 bit(s) * 768 * 3200	0 = solar zenith <= 70 degrees 1 = solar zenith angle > 70 degrees	0 - 1
Sun Glint Pixel	2 bit(s) * 768 * 3200	0 = None 1 = Geometry Based 2 = Wind Speed Based 3 = Geometry and Wind Based	0 - 3
Land/Water Background Pixel	3 bit(s) * 768 * 3200	0 = Land And Desert 1 = Land No Desert 2 = Inland Water 3 = Sea Water 5 = Coastal	0 - 5
Shadow Detected Pixel	1 bit(s) * 768 * 3200	0 = No 1 = Yes	0 - 1
Non Cloud Obstruction (Heavy Aerosol)	1 bit(s) * 768 * 3200	0 = No 1 = Yes	0 - 1
Thin Cirrus Reflective	1 bit(s) * 768 * 3200	0 = No Cloud 1 = Cloud	0 - 1
Thin Cirrus Emissive	1 bit(s) * 768 * 3200	0 = No Cloud 1 = Cloud	0 - 1
Spare	1 bit(s) * 768 * 3200	[spare quality bits]	n/a
Bad M1 SDR Data Pixel	1 bit(s) * 768 * 3200	0 = No 1 = Yes	0 - 1
Bad M2 SDR Data Pixel	1 bit(s) * 768 * 3200	0 = No 1 = Yes	0 - 1
Bad M3 SDR Data Pixel	1 bit(s) * 768 * 3200	0 = No 1 = Yes	0 - 1
Bad M4 SDR Data Pixel	1 bit(s) * 768 * 3200	0 = No 1 = Yes	0 - 1
Bad M5 SDR Data Pixel	1 bit(s) * 768 * 3200	0 = No 1 = Yes	0 - 1
Bad M7 SDR Data Pixel	1 bit(s) * 768 * 3200	0 = No 1 = Yes	0 - 1
Bad M8 SDR Data Pixel	1 bit(s) * 768 * 3200	0 = No 1 = Yes	0 - 1
Bad M10 SDR Data Pixel	1 bit(s) * 768 * 3200	0 = No 1 = Yes	0 - 1
Bad M11 SDR Data Pixel	1 bit(s) * 768 * 3200	0 = No 1 = Yes	0 - 1
Bad I1 SDR Data Pixel	1 bit(s) * 768 * 3200	0 = No 1 = Yes	0 - 1
Bad I2 SDR Data Pixel	1 bit(s) * 768 * 3200	0 = No 1 = Yes	0 - 1
Bad I3 SDR Data Pixel	1 bit(s) * 768 * 3200	0 = No 1 = Yes	0 - 1
Overall Quality of AOT Pixel	1 bit(s) * 768 * 3200	0 = No 1 = Yes	0 - 1
Missing AOT Input Data Pixel	1 bit(s) * 768 * 3200	0 = No 1 = Yes	0 - 1

Input	Type/Size	Description	Units (where applicable) / Valid Range
Missing AM Input Data Pixel	1 bit(s) * 768 * 3200	0 = No 1 = Yes	0 - 1
Missing WV Input Data Pixel	1 bit(s) * 768 * 3200	0 = No 1 = Yes	0 - 1
Missing OZ Input Data Pixel	1 bit(s) * 768 * 3200	0 = No 1 = Yes	0 - 1
Missing SP Input Data Pixel	1 bit(s) * 768 * 3200	0 = No 1 = Yes	0 - 1
Overall Quality M1 SR Data	1 bit(s) * 768 * 3200	0 = No 1 = Yes	0 - 1
Overall Quality M2 SR Data	1 bit(s) * 768 * 3200	0 = No 1 = Yes	0 - 1
Overall Quality M3 SR Data	1 bit(s) * 768 * 3200	0 = No 1 = Yes	0 - 1
Overall Quality M4 SR Data	1 bit(s) * 768 * 3200	0 = No 1 = Yes	0 - 1
Overall Quality M5 SR Data	1 bit(s) * 768 * 3200	0 = No 1 = Yes	0 - 1
Overall Quality M7 SR Data	1 bit(s) * 768 * 3200	0 = No 1 = Yes	0 - 1
Overall Quality M8 SR Data	1 bit(s) * 768 * 3200	0 = No 1 = Yes	0 - 1
Overall Quality M10 SR Data	1 bit(s) * 768 * 3200	0 = No 1 = Yes	0 - 1
Overall Quality M11 SR Data	1 bit(s) * 768 * 3200	0 = No 1 = Yes	0 - 1
Overall Quality I1 SR Data	1 bit(s) * 768 * 3200	0 = No 1 = Yes	0 - 1
Overall Quality I2 SR Data	1 bit(s) * 768 * 3200	0 = No 1 = Yes	0 - 1
Overall Quality I3 SR Data	1 bit(s) * 768 * 3200	0 = No 1 = Yes	0 - 1
Spare	2 bit(s) * 768 * 3200	[spare quality bits]	n/a

Table 58. GranToGrid Monthly Surface Reflectance / Brightness Temperature / Vegetation Index Input: VIIRS SDR BT Band 12 (VIIRS-M12-FSDR)

Input	Type	Description	Units (where applicable) / Valid Range
Granule-Level Data Items			
mode	UInt8	0 = Night 1 = Day 2 = Mixed	0 - 2
act_scans	Int32	Actual number of scans in this granule	0 - Max_scans
Bad Detector 1-16	16 bit(s)	0 = Good 1 = Bad	0 - 1
Scan-Level Data Items			
scan_mode	UInt8 * 48	0 = Night 1 = Day	0 - 1
Half Angle Mirror Side	1 bit(s) * 48	0 = A-Side 1 = B-Side	0 - 1

Input	Type	Description	Units (where applicable) / Valid Range
Moon in keep-out-box	1 bit(s) * 48	0 = Moon not in Space View 1 = Moon in Space View	0 - 1
Spare	6 bit(s) * 48	[spare bits]	n/a
Checksum (1st through 6th bits of 1st element in array)	6 bit(s) * 48 * 4	0 = Did Verify 1 = Did not verify	0 - 1
Scan Data Presence (7th bit of 1st element in array)	1 bit(s) * 48 * 4	0 = Some Valid Data 1 = No Valid Data	0 - 1
Spare (spare 25 bits of 32 bits of 1st element in array)	25 bit(s) * 48 * 4	Spare (spare 25 bits of 32 bits of 1st element in array)	n/a
Missing packets in Scan (2nd element of array)	32 bit(s) * 48 * 4	Missing packets in Scan (2nd element of array)	n/a
Packets with bad Checksum in Scan (3rd element of array)	32 bit(s) * 48 * 4	Packets with bad Checksum in Scan (3rd element of array)	n/a
Discarded packets in Scan (4th element of array)	32 bit(s) * 48 * 4	Discarded packets in Scan (4th element of array)	n/a
Detector per band quality flag	8 bit(s) * 768	0 = Good 255 = reduced quality	0 - 255
Pixel-Level Data Items			
radiance	Float32 * 768 * 3200	Radiance	Watts/(m^2 micrometer sr); 0 - 1800
Btemp	Float32 * 768 * 3200	Brightness Temperature	K; 123 - 333
SDR Quality	2 bit(s) * 768 * 3200	0 = Good 1 = Poor 2 = No Calibration	0 - 2
Saturated Pixel	2 bit(s) * 768 * 3200	0 = None Saturated 1 = Some Saturated 2 = All Saturated	0 - 2
Missing Data	2 bit(s) * 768 * 3200	0 = All data present 1 = EV RDR data missing 2 = Cal data missing 3 = Thermistor data missing	0 - 3
Out of Range	2 bit(s) * 768 * 3200	0 = All data within range 1 = Radiance out of range 2 = Reflectance or EBBT out of range 3 = Both Radiance and Reflectance or EBBT out of range	0 - 3

Table 59. GranToGrid Monthly Surface Reflectance / Brightness Temperature / Vegetation Index Input: VIIRS SDR BT Band 13 (VIIRS-M13-SDR)

Input	Type	Description	Units (where applicable) / Valid Range
Granule-Level Data Items			
mode	UInt8	0 = Night 1 = Day 2 = Mixed	0 - 2
act_scans	Int32	Actual number of scans in this granule	0 - Max_scans
Bad Detector 1-16	16 bit(s)	0 = Good 1 = Bad	0 - 1
Scan-Level Data Items			
scan_mode	UInt8 * 48	0 = Night 1 = Day	0 - 1
Half Angle Mirror Side	1 bit(s) * 48	0 = A-Side 1 = B-Side	0 - 1
Moon in keep-out-box	1 bit(s) * 48	0 = Moon not in Space View 1 = Moon in Space View	0 - 1
Spare	6 bit(s) * 48	[spare bits]	n/a
Checksum (1st through 6th bits of 1st element in array)	6 bit(s) * 48 * 4	0 = Did Verify 1 = Did not verify	0 - 1
Scan Data Presence (7th bit of 1st element in array)	1 bit(s) * 48 * 4	0 = Some Valid Data 1 = No Valid Data	0 - 1
Spare (spare 25 bits of 32 bits of 1st element in array)	25 bit(s) * 48 * 4	Spare (spare 25 bits of 32 bits of 1st element in array)	n/a
Missing packets in Scan (2nd element of array)	32 bit(s) * 48 * 4	Missing packets in Scan (2nd element of array)	n/a
Packets with bad Checksum in Scan (3rd element of array)	32 bit(s) * 48 * 4	Packets with bad Checksum in Scan (3rd element of array)	n/a
Discarded packets in Scan (4th element of array)	32 bit(s) * 48 * 4	Discarded packets in Scan (4th element of array)	n/a
Detector per band quality flag	8 bit(s) * 768	0 = Good 255 = reduced quality	0 - 255
Pixel-Level Data Items			
radiance	Float32 * 768 * 3200	Radiance	Watts/(m^2 micrometer sr); 0 - 1800
Btemp	Float32 * 768 * 3200	Brightness Temperature	K; 123 - 333
SDR Quality	2 bit(s) * 768 * 3200	0 = Good 1 = Poor 2 = No Calibration	0 - 2
Saturated Pixel	2 bit(s) * 768 * 3200	0 = None Saturated 1 = Some Saturated 2 = All Saturated	0 - 2

Check the JPSS MIS Server at https://jpssmis.gsfc.nasa.gov/frontmenu_dsp.cfm to verify that this is the correct version prior to use

Input	Type	Description	Units (where applicable) / Valid Range
Missing Data	2 bit(s) * 768 * 3200	0 = All data present 1 = EV RDR data missing 2 = Cal data missing 3 = Thermistor data missing	0 - 3
Out of Range	2 bit(s) * 768 * 3200	0 = All data within range 1 = Radiance out of range 2 = Reflectance or EBBT out of range 3 = Both Radiance and Reflectance or EBBT out of range	0 - 3

Table 60. GranToGrid Monthly Surface Reflectance / Brightness Temperature / Vegetation Index Input: VIIRS SDR BT Band 14 (VIIRS-M14-FSDR)

Input	Type	Description	Units (where applicable) / Valid Range
Granule-Level Data Items			
mode	UInt8	0 = Night 1 = Day 2 = Mixed	0 - 2
act_scans	Int32	Actual number of scans in this granule	0 - Max_scans
Bad Detector 1-16	16 bit(s)	0 = Good 1 = Bad	0 - 1
Scan-Level Data Items			
scan_mode	UInt8 * 48	0 = Night 1 = Day	0 - 1
Half Angle Mirror Side	1 bit(s) * 48	0 = A-Side 1 = B-Side	0 - 1
Moon in keep-out-box	1 bit(s) * 48	0 = Moon not in Space View 1 = Moon in Space View	0 - 1
Spare	6 bit(s) * 48	[spare bits]	n/a
Checksum (1st through 6th bits of 1st element in array)	6 bit(s) * 48 * 4	0 = Did Verify 1 = Did not verify	0 - 1
Scan Data Presence (7th bit of 1st element in array)	1 bit(s) * 48 * 4	0 = Some Valid Data 1 = No Valid Data	0 - 1
Spare (spare 25 bits of 32 bits of 1st element in array)	25 bit(s) * 48 * 4	Spare (spare 25 bits of 32 bits of 1st element in array)	n/a
Missing packets in Scan (2nd element of array)	32 bit(s) * 48 * 4	Missing packets in Scan (2nd element of array)	n/a
Packets with bad Checksum in Scan (3rd element of array)	32 bit(s) * 48 * 4	Packets with bad Checksum in Scan (3rd element of array)	n/a
Discarded packets in Scan (4th element of array)	32 bit(s) * 48 * 4	Discarded packets in Scan (4th element of array)	n/a
Detector per band quality flag	8 bit(s) * 768	0 = Good 255 = reduced quality	0 - 255

Input	Type	Description	Units (where applicable) / Valid Range
Pixel-Level Data Items			
radiance	Float32 * 768 * 3200	Radiance	Watts/(m^2 micrometer sr); 0 - 1800
Btemp	Float32 * 768 * 3200	Brightness Temperature	K; 123 - 333
SDR Quality	2 bit(s) * 768 * 3200	0 = Good 1 = Poor 2 = No Calibration	0 - 2
Saturated Pixel	2 bit(s) * 768 * 3200	0 = None Saturated 1 = Some Saturated 2 = All Saturated	0 - 2
Missing Data	2 bit(s) * 768 * 3200	0 = All data present 1 = EV RDR data missing 2 = Cal data missing 3 = Thermistor data missing	0 - 3
Out of Range	2 bit(s) * 768 * 3200	0 = All data within range 1 = Radiance out of range 2 = Reflectance or EBBT out of range 3 = Both Radiance and Reflectance or EBBT out of range	0 - 3

Table 61. GranToGrid Monthly Surface Reflectance / Brightness Temperature / Vegetation Index Input: VIIRS SDR BT Band 15 (VIIRS-M15-FSDR)

Input	Type	Description	Units (where applicable) / Valid Range
Granule-Level Data Items			
mode	UInt8	0 = Night 1 = Day 2 = Mixed	0 - 2
act_scans	Int32	Actual number of scans in this granule	0 - Max_scans
Bad Detector 1-16	16 bit(s)	0 = Good 1 = Bad	0 - 1
Scan-Level Data Items			
scan_mode	UInt8 * 48	0 = Night 1 = Day	0 - 1
Half Angle Mirror Side	1 bit(s) * 48	0 = A-Side 1 = B-Side	0 - 1
Moon in keep-out-box	1 bit(s) * 48	0 = Moon not in Space View 1 = Moon in Space View	0 - 1
Spare	6 bit(s) * 48	[spare bits]	n/a
Checksum (1st through 6th bits of 1st element in array)	6 bit(s) * 48 * 4	0 = Did Verify 1 = Did not verify	0 - 1
Scan Data Presence (7th bit of 1st element in array)	1 bit(s) * 48 * 4	0 = Some Valid Data 1 = No Valid Data	0 - 1
Spare (spare 25 bits of 32 bits of 1st element in array)	25 bit(s) * 48 * 4	Spare (spare 25 bits of 32 bits of 1st element in array)	n/a

Input	Type	Description	Units (where applicable) / Valid Range
Missing packets in Scan (2nd element of array)	32 bit(s) * 48 * 4	Missing packets in Scan (2nd element of array)	n/a
Packets with bad Checksum in Scan (3rd element of array)	32 bit(s) * 48 * 4	Packets with bad Checksum in Scan (3rd element of array)	n/a
Discarded packets in Scan (4th element of array)	32 bit(s) * 48 * 4	Discarded packets in Scan (4th element of array)	n/a
Detector per band quality flag	8 bit(s) * 768	0 = Good 255 = reduced quality	0 - 255
Pixel-Level Data Items			
radiance	Float32 * 768 * 3200	Radiance	Watts/(m^2 micrometer sr); 0 - 1800
Btemp	Float32 * 768 * 3200	Brightness Temperature	K; 123 - 333
SDR Quality	2 bit(s) * 768 * 3200	0 = Good 1 = Poor 2 = No Calibration	0 - 2
Saturated Pixel	2 bit(s) * 768 * 3200	0 = None Saturated 1 = Some Saturated 2 = All Saturated	0 - 2
Missing Data	2 bit(s) * 768 * 3200	0 = All data present 1 = EV RDR data missing 2 = Cal data missing 3 = Thermistor data missing	0 - 3
Out of Range	2 bit(s) * 768 * 3200	0 = All data within range 1 = Radiance out of range 2 = Reflectance or EBBT out of range 3 = Both Radiance and Reflectance or EBBT out of range	0 - 3

Table 62. GranToGrid Monthly Surface Reflectance / Brightness Temperature / Vegetation Index Input: VIIRS SDR BT Band 16 (VIIRS-M16-FSDR)

Input	Type	Description	Units (where applicable) / Valid Range
Granule-Level Data Items			
mode	UInt8	0 = Night 1 = Day 2 = Mixed	0 - 2
act_scans	Int32	Actual number of scans in this granule	0 - Max_scans
Bad Detector 1-16	16 bit(s)	0 = Good 1 = Bad	0 - 1
Scan-Level Data Items			
scan_mode	UInt8 * 48	0 = Night 1 = Day	0 - 1
Half Angle Mirror Side	1 bit(s) * 48	0 = A-Side 1 = B-Side	0 - 1
Moon in keep-out-box	1 bit(s) * 48	0 = Moon not in Space View 1 = Moon in Space View	0 - 1
Spare	6 bit(s) * 48	[spare bits]	n/a

Input	Type	Description	Units (where applicable) / Valid Range
Checksum (1st through 6th bits of 1st element in array)	6 bit(s) * 48 * 4	0 = Did Verify 1 = Did not verify	0 - 1
Scan Data Presence (7th bit of 1st element in array)	1 bit(s) * 48 * 4	0 = Some Valid Data 1 = No Valid Data	0 - 1
Spare (spare 25 bits of 32 bits of 1st element in array)	25 bit(s) * 48 * 4	Spare (spare 25 bits of 32 bits of 1st element in array)	n/a
Missing packets in Scan (2nd element of array)	32 bit(s) * 48 * 4	Missing packets in Scan (2nd element of array)	n/a
Packets with bad Checksum in Scan (3rd element of array)	32 bit(s) * 48 * 4	Packets with bad Checksum in Scan (3rd element of array)	n/a
Discarded packets in Scan (4th element of array)	32 bit(s) * 48 * 4	Discarded packets in Scan (4th element of array)	n/a
Detector per band quality flag	8 bit(s) * 768	0 = Good 255 = reduced quality	0 - 255
Pixel-Level Data Items			
radiance	Float32 * 768 * 3200	Radiance	Watts/(m^2 micrometer sr); 0 - 1800
Btemp	Float32 * 768 * 3200	Brightness Temperature	K; 123 - 333
SDR Quality	2 bit(s) * 768 * 3200	0 = Good 1 = Poor 2 = No Calibration	0 - 2
Saturated Pixel	2 bit(s) * 768 * 3200	0 = None Saturated 1 = Some Saturated 2 = All Saturated	0 - 2
Missing Data	2 bit(s) * 768 * 3200	0 = All data present 1 = EV RDR data missing 2 = Cal data missing 3 = Thermistor data missing	0 - 3
Out of Range	2 bit(s) * 768 * 3200	0 = All data within range 1 = Radiance out of range 2 = Reflectance or EBBT out of range 3 = Both Radiance and Reflectance or EBBT out of range	0 - 3

Table 63. GranToGrid Monthly Surface Reflectance / Brightness Temperature / Vegetation Index Input: VIIRS Moderate Terrain Corrected Geolocation (VIIRS-MOD-RGEO-TC)

Input	Type	Description	Units (where applicable) / Valid Range
Granule-Level Data Items			
mode	UInt8	0 = Night 1 = Day 2 = Mixed	0 - 2
act_scans	Int32	Actual number of scans for this granule	0 - Max_scans
Scan-Level Data Items			
scanStartTime	Int64 * 48	Start time for the scan	IET microseconds; 0 - 1.00E+38
scanMidTime	Int64 * 48	Mid time for the scan	IET microseconds; 0 - 1.00E+38
scPosition	Float32 * 48 * 3	Spacecraft Position	meters; -7.46E+06 - 7.40E+06
scVelocity	Float32 * 48 * 3	Spacecraft Velocity	meters/sec; -6600 - 6600
scAttitude	Float32 * 48 * 3	Spacecraft Attitude	arcsec; -450 - 450
scSunZen	Float32 * 48	Solar Zenith Angle	Radians; 0 - pi/2
scSunAzm	Float32 * 48	Solar Azimuth Angle	Radians; (-pi/2) - pi/2
scan_mode	UInt8 * 48	0 = Night 1 = Day	0 - 1
Interpolation Stage	2 bit(s) * 48	0 = Nominal - E&A data available 1 = Missing Data <= Small Gap 2 = Small Gap < Missing Data <= Granule Boundary 3 = Missing Data > Granule Boundary	0 - 3
HAM Impulse flag	1 bit(s) * 48	0 = Good Data 1 = Bad Data	0 - 1
Above South Atlantic Anomaly	1 bit(s) * 48	0 = False 1 = True	0 - 1
Solar Eclipse	1 bit(s) * 48	0 = False 1 = True	0 - 1
Spare	3 bit(s) * 48	[spare quality bits]	n/a
Pixel-Level Data Items			
lat	Float32 * 768 * 3200	Latitude	Radians; (-pi/2) - pi/2
lon	Float32 * 768 * 3200	Longitude	Radians; (-pi) - pi
sunzen	Float32 * 768 * 3200	Solar Zenith Angle	Radians; 0 - pi/2
sunazm	Float32 * 768 * 3200	Solar Azimuth Angle	Radians; (-pi/2) - pi/2
satzen	Float32 * 768 * 3200	Sensor Zenith Angle	Radians; 0 - pi/2
satazm	Float32 * 768 * 3200	Sensor Azimuth Angle	Radians; 0 - pi
height	Float32 * 768 * 3200	Height	meters; -400 - 10000

Input	Type	Description	Units (where applicable) / Valid Range
range	Float32 * 768 * 3200	Range	meters; 800000 - 2000000
Invalid Input Data	1 bit(s) * 768 * 3200	0 = Valid 1 = Invalid	0 - 1
Bad Pointing	1 bit(s) * 768 * 3200	0 = Good Pointing 1 = Bad Pointing	0 - 1
Bad Terrain	1 bit(s) * 768 * 3200	0 = Good Terrain 1 = Bad Terrain	0 - 1
Invalid Solar Angles	1 bit(s) * 768 * 3200	0 = Valid angles 1 = Invalid angles	0 - 1
Spare	4 bit(s) * 768 * 3200	[spare quality bits]	n/a

Table 64. GranToGrid Monthly Surface Reflectance / Brightness Temperature / Vegetation Index Input: Sinusoidal Map Earth/Land Lookup Table (VIIRS-Grid-SIN-Tiles-Earth-Land-LUT)

Input	Type/Size	Description	Units (where applicable) / Valid Range
Classification	UInt8 * 72 * 72	Information for each tile on the Sinusoidal Grid 0 = off the earth 1 = on the earth - not land 3 = on the earth - land	0 - 3

Table 65. GranToGrid Monthly Surface Reflectance / Brightness Temperature / Vegetation Index Input: Master Land Index Tiles (GridIP-VIIRS-MLI-Tile)

Input	Type/Size	Description	Units (where applicable) / Valid Range
Tile-Level Data Items			
numLandCells	Int32	Number of land cells for this tile	0 - 180000
numLandCells5k	UInt16	Number of 5-km land cells for this tile	0 - 7200
Cell-Level Data Items			
indices	Int32 * 300 * 600	Offset into the indirect-indexed tile product for the cell if land; FILL if water	0 - 179999
indices5k	UInt16 * 60 * 120	Offset into the indirect-indexed tile product for the 5-km cell if land; FILL if water	0 - 7199

2.8.1.1.2 GridToGrid Post Comp Inputs

Tables 66 through 69 show the GridToGrid Post Compositing inputs.

Table 66. GridToGrid Monthly Surface Reflectance / Brightness Temperature / Vegetation Index Post Compositing Input: Monthly SR/BT/VI Tiles (GridIP-VIIRS-Mth-SR-BT-VI-Monthly-Tile)

Input	Type/Size	Description	Units (where applicable) / Valid Range
Tile-Level Data Items			
brightTempScale1	Float32	Scale Factor for Brightness Temperature	Minfloat - Maxfloat
brightTempOffset1	Float32	Offset for Brightness Temperature	Minfloat - Maxfloat
brightTempScale2	Float32	Scale Factor for Brightness Temperature	Minfloat - Maxfloat

Input	Type/Size	Description	Units (where applicable) / Valid Range
brightTempOffset2	Float32	Offset for Brightness Temperature	Minfloat - Maxfloat
brightTempScale3	Float32	Scale Factor for Brightness Temperature	Minfloat - Maxfloat
brightTempOffset3	Float32	Offset for Brightness Temperature	Minfloat - Maxfloat
brightTempScale4	Float32	Scale Factor for Brightness Temperature	Minfloat - Maxfloat
brightTempOffset4	Float32	Offset for Brightness Temperature	Minfloat - Maxfloat
brightTempScale5	Float32	Scale Factor for Brightness Temperature	Minfloat - Maxfloat
brightTempOffset5	Float32	Offset for Brightness Temperature	Minfloat - Maxfloat
surfReflectScale	Float32	Scale Factor for Surface Reflectance	Minfloat - Maxfloat
surfReflectOffset	Float32	Offset for Surface Reflectance	Minfloat - Maxfloat
tocNdviScale	Float32	Scale Factor for TOC NDVI	Minfloat - Maxfloat
tocNdviOffset	Float32	Offset Factor for TOC NDVI	Minfloat - Maxfloat
senZenAngScale	Float32	Scale Factor for Sensor Zenith Angle	Minfloat - Maxfloat
senZenAngOffset	Float32	Offset for Sensor Zenith Angle	Minfloat - Maxfloat
Cell-Level Data Items			
brightTemp	UInt16 * 2 * 5 * numLandCells	Brightness Temperature	Scaled Degrees Kelvin; 0 - 65527
surfReflect	UInt16 * 2 * 9 * numLandCells	Surface Reflectance	0 - 65527
tocNdvi	UInt16 * 2 * numLandCells	Top Of Canopy Normalized Difference Vegetation Index	Scaled unitless ; 0 - 65527 Unscaled (-1.0) - (+1.0)
senZenAng	UInt16 * 2 * numLandCells	Sensor Zenith Angle	Scaled Radians; 0 - 65527

Table 67. GridToGrid Monthly Surface Reflectance / Brightness Temperature / Vegetation Index Post Compositing Input: Monthly SR/BT/VI Final Tiles (GridIP-VIIRS-Mth-SR-BT-VI-Monthly-Final-Tile)

Input	Type/Size	Description	Units (where applicable) / Valid Range
Tile-Level Data Items			
brightTempScale1	Float32	Scale Factor for Brightness Temperature	Minfloat - Maxfloat
brightTempOffset1	Float32	Offset for Brightness Temperature	Minfloat - Maxfloat
brightTempScale2	Float32	Scale Factor for Brightness Temperature	Minfloat - Maxfloat
brightTempOffset2	Float32	Offset for Brightness Temperature	Minfloat - Maxfloat
brightTempScale3	Float32	Scale Factor for Brightness Temperature	Minfloat - Maxfloat
brightTempOffset3	Float32	Offset for Brightness Temperature	Minfloat - Maxfloat
brightTempScale4	Float32	Scale Factor for Brightness Temperature	Minfloat - Maxfloat
brightTempOffset4	Float32	Offset for Brightness Temperature	Minfloat - Maxfloat
brightTempScale5	Float32	Scale Factor for Brightness Temperature	Minfloat - Maxfloat
brightTempOffset5	Float32	Offset for Brightness Temperature	Minfloat - Maxfloat
surfReflectScale	Float32	Scale Factor for Surface Reflectance	Minfloat - Maxfloat
surfReflectOffset	Float32	Offset for Surface Reflectance	Minfloat - Maxfloat
tocNdviScale	Float32	Scale Factor for TOC NDVI	Minfloat - Maxfloat
tocNdviOffset	Float32	Offset Factor for TOC NDVI	Minfloat - Maxfloat
senZenAngScale	Float32	Scale Factor for Sensor Zenith Angle	Minfloat - Maxfloat
senZenAngOffset	Float32	Offset for Sensor Zenith Angle	Minfloat - Maxfloat

Input	Type/Size	Description	Units (where applicable) / Valid Range
Cell-Level Data Items			
brightTemp	UInt16 * 5 * numLandCells	Brightness Temperature	Scaled Degrees Kelvin; 103 - 683
surfReflect	UInt16 * 9 * numLandCells	Surface Reflectance	0 – 1.5
tocNdvi	UInt16 * numLandCells	Top Of Canopy Normalized Difference Vegetation Index	Scaled unitless ; 0 - 65527 Unscaled (-1.0) - (+1.0)
senZenAng	UInt16 * numLandCells	Sensor Zenith Angle	Scaled Radians; 0 - 65527

Table 68. GridToGrid Monthly Surface Reflectance / Brightness Temperature / Vegetation Index Post Compositing Input: Sinusoidal Map Earth/Land Lookup Table (VIIRS-Grid-SIN-Tiles-Earth-Land-LUT)

Input	Type/Size	Description	Units (where applicable) / Valid Range
Classification	UInt8 * 72 * 72	Information for each tile on the Sinusoidal Grid 0 = off the earth 1 = on the earth - not land 3 = on the earth - land	0 - 3

Table 69. GridToGrid Monthly Surface Reflectance / Brightness Temperature / Vegetation Index Post Compositing Input: Master Land Index Tiles (GridIP-VIIRS-MLI-Tile)

Input	Type/Size	Description	Units (where applicable) / Valid Range
Tile-Level Data Items			
numLandCells	Int32	Number of land cells for this tile	0 - 180000
numLandCells5k	UInt16	Number of 5-km land cells for this tile	0 - 7200
Cell-Level Data Items			
indices	Int32 * 300 * 600	Offset into the indirect-indexed tile product for the cell if land; FILL if water	0 - 179999
indices5k	UInt16 * 60 * 120	Offset into the indirect-indexed tile product for the 5-km cell if land; FILL if water	0 - 7199

2.8.1.1.3 GridToGrid Init Inputs

Tables 70 through 72 show the GridToGrid Initialization inputs.

Table 70. GridToGrid Monthly Surface Reflectance / Brightness Temperature / Vegetation Index Initialization Input: Monthly SR/BT/VI Template Tiles (GridIP-VIIRS-Mth-SR-BT-VI-Template-Monthly-Tile)

Input	Type/Size	Description	Units (where applicable) / Valid Range
Tile-Level Data Items			
brightTempScale1	Float32	Scale Factor for Brightness Temperature	Minfloat - Maxfloat
brightTempOffset1	Float32	Offset for Brightness Temperature	Minfloat - Maxfloat
brightTempScale2	Float32	Scale Factor for Brightness Temperature	Minfloat - Maxfloat
brightTempOffset2	Float32	Offset for Brightness Temperature	Minfloat - Maxfloat

Input	Type/Size	Description	Units (where applicable) / Valid Range
brightTempScale3	Float32	Scale Factor for Brightness Temperature	Minfloat - Maxfloat
brightTempOffset3	Float32	Offset for Brightness Temperature	Minfloat - Maxfloat
brightTempScale4	Float32	Scale Factor for Brightness Temperature	Minfloat - Maxfloat
brightTempOffset4	Float32	Offset for Brightness Temperature	Minfloat - Maxfloat
brightTempScale5	Float32	Scale Factor for Brightness Temperature	Minfloat - Maxfloat
brightTempOffset5	Float32	Offset for Brightness Temperature	Minfloat - Maxfloat
surfReflectScale	Float32	Scale Factor for Surface Reflectance	Minfloat - Maxfloat
surfReflectOffset	Float32	Offset for Surface Reflectance	Minfloat - Maxfloat
tocNdviScale	Float32	Scale Factor for TOC NDVI	Minfloat - Maxfloat
tocNdviOffset	Float32	Offset Factor for TOC NDVI	Minfloat - Maxfloat
senZenAngScale	Float32	Scale Factor for Sensor Zenith Angle	Minfloat - Maxfloat
senZenAngOffset	Float32	Offset for Sensor Zenith Angle	Minfloat - Maxfloat
Cell-Level Data Items			
brightTemp	UInt16 * 2 * 5 * numLandCells	Brightness Temperature	Scaled Degrees Kelvin; 0 - 65527
surfReflect	UInt16 * 2 * 9 * numLandCells	Surface Reflectance	0 - 65527
tocNdvi	UInt16 * 2 * numLandCells	Top Of Canopy Normalized Difference Vegetation Index	Scaled unitless ; 0 - 65527 Unscaled (-1.0) - (+1.0)
senZenAng	UInt16 * 2 * numLandCells	Sensor Zenith Angle	Scaled Radians; 0 - 65527

Table 71. GridToGrid Monthly Surface Reflectance / Brightness Temperature / Vegetation Index Initialization Input: Sinusoidal Map Earth/Land Lookup Table (VIIRS-Grid-SIN-Tiles-Earth-Land-LUT)

Input	Type/Size	Description	Units (where applicable) / Valid Range
Classification	UInt8 * 72 * 72	Information for each tile on the Sinusoidal Grid 0 = off the earth 1 = on the earth - not land 3 = on the earth - land	0 - 3

Table 72. GridToGrid Monthly Surface Reflectance / Brightness Temperature / Vegetation Index Initialization Input: Master Land Index Tiles (GridIP-VIIRS-MLI-Tile)

Input	Type/Size	Description	Units (where applicable) / Valid Range
Tile-Level Data Items			
numLandCells	Int32	Number of land cells for this tile	0 - 180000
numLandCells5k	UInt16	Number of 5-km land cells for this tile	0 - 7200
Cell-Level Data Items			
indices	Int32 * 300 * 600	Offset into the indirect-indexed tile product for the cell if land; FILL if water	0 - 179999
indices5k	UInt16 * 60 * 120	Offset into the indirect-indexed tile product for the 5-km cell if land; FILL if water	0 - 7199

2.8.1.2 Outputs

2.8.1.2.1 GranToGrid and GridToGrid Initialization Outputs

Table 73 shows the GranToGrid and GridToGrid Initialization outputs.

Table 73. GranToGrid Monthly Surface Reflectance / Brightness Temperature / Vegetation Index Output: Monthly SR/BT/VI Tiles (GridIP-VIIRS-Mth-SR-BT-VI-Monthly-Tile)

Input	Type/Size	Description	Units (where applicable) / Valid Range
Tile-Level Data Items			
brightTempScale1	Float32	Scale Factor for Brightness Temperature	Minfloat - Maxfloat
brightTempOffset1	Float32	Offset for Brightness Temperature	Minfloat - Maxfloat
brightTempScale2	Float32	Scale Factor for Brightness Temperature	Minfloat - Maxfloat
brightTempOffset2	Float32	Offset for Brightness Temperature	Minfloat - Maxfloat
brightTempScale3	Float32	Scale Factor for Brightness Temperature	Minfloat - Maxfloat
brightTempOffset3	Float32	Offset for Brightness Temperature	Minfloat - Maxfloat
brightTempScale4	Float32	Scale Factor for Brightness Temperature	Minfloat - Maxfloat
brightTempOffset4	Float32	Offset for Brightness Temperature	Minfloat - Maxfloat
brightTempScale5	Float32	Scale Factor for Brightness Temperature	Minfloat - Maxfloat
brightTempOffset5	Float32	Offset for Brightness Temperature	Minfloat - Maxfloat
surfReflectScale	Float32	Scale Factor for Surface Reflectance	Minfloat - Maxfloat
surfReflectOffset	Float32	Offset for Surface Reflectance	Minfloat - Maxfloat
tocNdviScale	Float32	Scale Factor for TOC NDVI	Minfloat - Maxfloat
tocNdviOffset	Float32	Offset Factor for TOC NDVI	Minfloat - Maxfloat
senZenAngScale	Float32	Scale Factor for Sensor Zenith Angle	Minfloat - Maxfloat
senZenAngOffset	Float32	Offset for Sensor Zenith Angle	Minfloat - Maxfloat
Cell-Level Data Items			
brightTemp	UInt16 * 2 * 5 * numLandCells	Brightness Temperature	Scaled Degrees Kelvin; 0 - 65527
surfReflect	UInt16 * 2 * 9 * numLandCells	Surface Reflectance	0 - 65527
tocNdvi	UInt16 * 2 * numLandCells	Top Of Canopy Normalized Difference Vegetation Index	Scaled unitless ; 0 - 65527 Unscaled (-1.0) - (+1.0)
senZenAng	UInt16 * 2 * numLandCells	Sensor Zenith Angle	Scaled Radians; 0 - 65527

2.8.1.2.2 GridToGrid Post Comp Outputs

Table 74 shows the GridToGrid Post Compositing outputs.

Table 74. GridToGrid Monthly Surface Reflectance / Brightness Temperature / Vegetation Index Post Compositing Output: Monthly SR/BT/VI Final Tiles (GridIP-VIIRS-Mth-SR-BT-VI-Monthly-Final-Tile)

Input	Type/Size	Description	Units (where applicable) / Valid Range
Tile-Level Data Items			
brightTempScale1	Float32	Scale Factor for Brightness Temperature	Minfloat - Maxfloat

Input	Type/Size	Description	Units (where applicable) / Valid Range
brightTempOffset1	Float32	Offset for Brightness Temperature	Minfloat - Maxfloat
brightTempScale2	Float32	Scale Factor for Brightness Temperature	Minfloat - Maxfloat
brightTempOffset2	Float32	Offset for Brightness Temperature	Minfloat - Maxfloat
brightTempScale3	Float32	Scale Factor for Brightness Temperature	Minfloat - Maxfloat
brightTempOffset3	Float32	Offset for Brightness Temperature	Minfloat - Maxfloat
brightTempScale4	Float32	Scale Factor for Brightness Temperature	Minfloat - Maxfloat
brightTempOffset4	Float32	Offset for Brightness Temperature	Minfloat - Maxfloat
brightTempScale5	Float32	Scale Factor for Brightness Temperature	Minfloat - Maxfloat
brightTempOffset5	Float32	Offset for Brightness Temperature	Minfloat - Maxfloat
surfReflectScale	Float32	Scale Factor for Surface Reflectance	Minfloat - Maxfloat
surfReflectOffset	Float32	Offset for Surface Reflectance	Minfloat - Maxfloat
tocNdviScale	Float32	Scale Factor for TOC NDVI	Minfloat - Maxfloat
tocNdviOffset	Float32	Offset Factor for TOC NDVI	Minfloat - Maxfloat
senZenAngScale	Float32	Scale Factor for Sensor Zenith Angle	Minfloat - Maxfloat
senZenAngOffset	Float32	Offset for Sensor Zenith Angle	Minfloat - Maxfloat
Cell-Level Data Items			
brightTemp	UInt16 * 5 * numLandCells	Brightness Temperature	Scaled Degrees Kelvin; 103 - 683
surfReflect	UInt16 * 9 * numLandCells	Surface Reflectance	0 – 1.5
tocNdvi	UInt16 * numLandCells	Top Of Canopy Normalized Difference Vegetation Index	Scaled unitless ; 0 - 65527 Unscaled (-1.0) - (+1.0)
senZenAng	UInt16 * numLandCells	Sensor Zenith Angle	Scaled Radians; 0 - 65527 Unscaled Radians; 0 – pi

2.8.2 Algorithm Processing

2.8.2.1 GranToGrid

The GranToGrid Monthly SR/BT/VI algorithm uses the Area Weight Grid IP to perform updates to monthly GIP tiles with data from good observations by aggregating and compositing. Aggregation is performed on all pixels, contributing to a grid cell, that contain no FILL values. Quality fields are also checked, and all of the following must be true before aggregating:

- cloudy mask = confidently clear
- night mask = day
- shadow mask = no shadow
- heavy aerosol mask = no aerosol

Only the best two observations are saved in the GIP. During compositing, the best and second best observations are first checked to ensure they are in the correct order. Next, a new observation is compared to the previous best. If the new observation is better, then the previous best is demoted to second best. If the new observation is better than the second best but not better than the best, then it becomes the new second best observation. An observation is determined to be better than another observation if either of the following is true:

- vi > best vi
- vi = best vi and sensor zenith angle < best sensor zenith angle

2.8.2.2 GridToGrid

There are two parts to the GridToGrid Monthly algorithms. The Monthly Initialization algorithm uses a template tile from a template GIP to initialize the Monthly tiles for use in GranToGrid processing for the new monthly period. It is run every month for a specified range of tiles, being dispatched one tile at a time. This algorithm copies the template tile for use in its output, thus retaining the template tile in DMS.

The Monthly Post Composite Data Reduction algorithm identifies which of the two best observations is the 'real' best. It chooses the best by constraining the view angle when comparing NDVI as follows:

```
if (2ndBestSenZenAng != FILL && 2ndBestSenZenAng <= bestSenZenAng-5 degrees)
or (rndNdviBest-rndNdvi2nd <= 1 && 2ndBestSenZenAng < bestSenZenAng) then
      use 2nd best as final best observation
else
      use best as final best observation
end if
```

'rndNdviBest' and 'rndNdvi2nd' are calculated by multiplying the ndvi value by 100 and then rounding to the nearest integer. This allows a comparison out to two decimal places.

Once the Monthly Post Composite Data Reduction algorithm has selected its output, it deletes the Monthly SR/BT/VI input tile and the previous year of the same month's Monthly Final tile after writing the new Monthly Final tile to DMS.

2.8.3 Graceful Degradation

2.8.3.1 Graceful Degration Inputs

None.

2.8.3.2 Graceful Degradation Processing

None.

2.8.3.3 Graceful Degradation Outputs

None.

2.8.4 Exception Handling

This GIP algorithm inherits the Processing (PRO) Common error handling strategy of removing output products when an error path is encountered. This error condition is handled at the level encountered and then the failure condition is forwarded to the calling program. A controller algorithm then removes any output products that it has, and the error condition continues to propagate up in the case of nested controllers.

2.8.5 Data Quality Monitoring

None.

2.8.6 Computational Precision Requirements

None.

2.8.7 Algorithm Support Considerations

None.

2.8.8 Assumptions and Limitations

None.

2.9 NBAR-NDVI Description

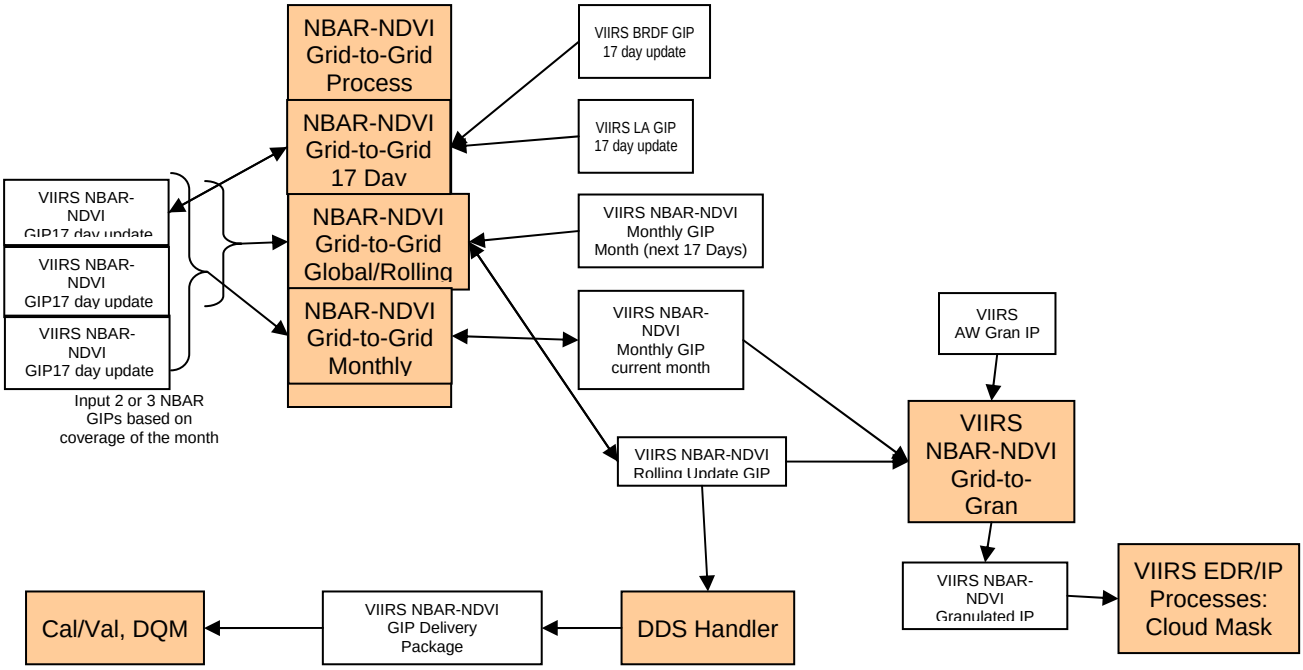

Figure 16. NBAR-NDVI Interrelationships Diagram

2.9.1 Interfaces

2.9.1.1 Inputs

2.9.1.1.1 Common Inputs

Tables 75 and 76 show the Common inputs.

Table 75. NBAR-NDVI Common Input: Sinusoidal Map Earth/Land Lookup Table (VIIRS-Grid-SIN-Tiles-Earth-Land-LUT)

Input	Type/Size	Description	Units (where applicable) / Valid Range
Classification	UInt8 * 72 * 72	Information for each tile on the Sinusoidal Grid 0 = off the earth 1 = on the earth - not land 3 = on the earth - land	0 - 3

Table 76. NBAR-NDVI Common Input: Master Land Index Tiles (GridIP-VIIRS-MLI-Tile)

Input	Type/Size	Description	Units (where applicable) / Valid Range
Tile-Level Data Items			
numLandCells	Int32	Number of land cells for this tile	0 - 180000
numLandCells5k	UInt16	Number of 5-km land cells for this tile	0 - 7200
Cell-Level Data Items			
indices	Int32 * 300 * 600	Offset into the indirect-indexed tile product for the cell if land; FILL if water	0 - 179999
indices5k	UInt16 * 60 * 120	Offset into the indirect-indexed tile product for the 5-km cell if land; FILL if water	0 - 7199

2.9.1.1.2 GridToGran Inputs

Tables 77 and 78 show the GridToGran inputs.

Table 77. GridToGran NBAR-NDVI Input: VIIRS Area Weight IP Gran Product (VIIRS-Grid-To-Gran-GridIP-AW-SWATH-Mod-IP)

Input	Type/Size	Description	Units (where applicable) / Valid Range
Granule-Level Data Items			
tileList	UInt8 * 5184	0 = sinTileIdNotRequired 1 = sinTileIdRequired	0 - 1
actScans	Int32	Actual number of scans in the granule	0 - 48
Pixel-Level Data Items			
tileId	UInt16 * 768 * 3200 * 10	Tile ID that this pixel maps to	0 - 5183

Table 78. GridToGran NBAR-NDVI Input: VIIRS NBAR-NDVI Rolling Tiles (GridIP-VIIRS-Nbar-Ndvi-Rolling-Tile)

Input	Type/Size	Description	Units (where applicable) / Valid Range
Tile-Level Data Items			
timestamps	Int64 * 3	Timestamp	IET; Minint - Maxint
scale	Float32	Scale Factor for NDVI	Minfloat - Maxfloat
offset	Float32	Offset for NDVI	Minfloat - Maxfloat
Cell-Level Data Items			
ndvi	UInt16 * numLandCells	Normalized Difference Vegetation Index value for this grid cell	Scaled unitless ; 0 - 65527 Unscaled (-1.0) - (+1.0)
timestampIndex	UInt8 * numLandCells	0 = most recent 17 Day NBAR-NDVI value 1 = second most recent 17 Day NBAR-NDVI value 2 = monthly climatology NBAR-NDVI value	0 - 2

2.9.1.1.3 GridToGrid 17 Day Inputs

Tables 79 and 80 show the GridToGrid 17 Day inputs.

Table 79. GridToGrid NBAR-NDVI 17 Day Input: VIIRS Land Surface Albedo GridIP Tiles (GridIP-VIIRS-Land-Surf-Albedo-17Day-Tile)

Input	Type/Size	Description	Units (where applicable) / Valid Range
Tile-Level Data Items			
coeffScale	Float32	Scale Factor for coefficients	Minfloat - Maxfloat
coeffOffset	Float32	Offset for coefficients	Minfloat - Maxfloat
blackSkyAlbedo Scale	Float32	Scale Factor for Black Sky Albedo	Minfloat - Maxfloat
blackSkyAlbedo Offset	Float32	Offset for Black Sky Albedo	Minfloat - Maxfloat
whiteSkyAlbedo Scale	Float32	Scale Factor for White Sky Albedo	Minfloat - Maxfloat
whiteSkyAlbedo Offset	Float32	Offset for White Sky Albedo	Minfloat - Maxfloat
nbarScale	Float32	Scale Factor for NBAR	Minfloat - Maxfloat
nbarOffset	Float32	Offset for NBAR	Minfloat - Maxfloat
meanSolarZenith Scale	Float32	Scale Factor for Mean solar zenith angle	Minfloat - Maxfloat
meanSolarZenith Offset	Float32	Offset for Mean solar zenith angle	Minfloat - Maxfloat
Cell-Level Data Items			
Coeff	UInt16 3 * 3 * 9 * numLandCells	Array of coefficients (parameters) for BRDF Kernel model having three-terms: isotropic , volumetric, and geometric	0 - (+1.0) Unscaled
blackSkyAlbedo	UInt16 * 3 * 9 * numLandCells	Spectral albedo in the absence of a diffuse component	0 - (+1.0) Unscaled
whiteSkyAlbedo	UInt1632 * 3 * 9 * numLandCells	Spectral albedo in the absence of a direct component, assuming an isotropic diffuse surface	0 - (+1.0) Unscaled
nbar	UInt1632 * 3 * 9 * numLandCells	Nadir BRDF Adjusted Reflectance calculated from BRDF at the mean solar zenith angle	0 - (+1.0) Unscaled
meanSolarZenith	UInt16 * 3 * numLandCells	Mean solar zenith angle derived from all the valid surface reflectance data (observations)	radians; 0 - (+1.48352986) Unscaled
kernel	UInt8 * 3 * 2 * numLandCells	Array of values indicating which of eight possible kernel types, two volumetric and six geometric, are selected for the BRDF model	0 - 7
spare	3 bit(s) * 3 * numLandCells	[spare quality bits]	n/a
criterion	2 bit(s) * 3 * numLandCells	0 = RMSE Heritage 1 = RMSE 2 = Coeffs Variance 3 = White-sky albedo variance	0 - 3
retrievalQuality	1 bit(s) * 3 * numLandCells	0 = poor 1 = good	0 - 1
inversionType	2 bit(s) * 3 * numLandCells	0 = N/A 1 = full inversion 2 = magnitude inversion 3 = history	0 - 3

Table 80. GridToGrid NBAR-NDVI 17 Day Input: BRDF Archetypal GIP Tiles (GridIP-VIIRS-Brdf-Arch-17Day-Tile)

Input	Type/Size	Description	Units (where applicable) / Valid Range
Tile-Level Data Items			
coeffScale	Float32	Scale Factor for coefficients	Minfloat - Maxfloat
coeffOffset	Float32	Offset for coefficients	Minfloat - Maxfloat
Cell-Level Data Items			
updateDate	Int64 * 3 * numLandCells	Update date/time for this cell	IET microseconds; Maxint - Maxint
coeff	UInt16 * 3 * 3 * 9 * numLandCells	Array of coefficients (parameters) for BRDF Kernel model having three-terms: isotropic , volumetric, and geometric	0 - (+1.0) Unscaled
kernel	UInt8 * 3 * 2 * numLandCells	Array of values indicating which of eight possible kernel types, two volumetric and six geometric, are selected for the BRDF model	0 - 255
spare	3 bit(s) * 3 * numLandCells	[spare quality bits]	n/a
criterion	2 bit(s) * 3 * numLandCells	0 = RMSE Heritage 1 = RMSE 2 = Coeffs Variance 3 = White-sky albedo variance	0 - 3
retrievalQuality	1 bit(s) * 3 * numLandCells	0 = poor 1 = good	0 - 1
inversionType	2 bit(s) * 3 * numLandCells	0 = N/A 1 = full inversion 2 = magnitude inversion 3 = history	0 - 3

2.9.1.1.4 GridToGrid Rolling Inputs

Tables 81 through 83 show the GridToGrid Rolling inputs.

Table 81. GridToGrid NBAR-NDVI Rolling Input: VIIRS NBAR-NDVI 17 Day Tiles (GridIP-VIIRS-Nbar-Ndvi-17Day-Tile)

Input	Type/Size	Description	Units (where applicable) / Valid Range
Tilel-Level Data Items			
scale	Float32	Scale Factor for NDVI	Minfloat - Maxfloat
offset	Float32	Offset for NDVI	Minfloat - Maxfloat
Cell-Level Data Items			
ndvi	UInt16 * numLandCells	Normalized Difference Vegetation Index value for this grid cell	Scaled unitless ; 0 - 65527 Unscaled (-1.0) - (+1.0)

Table 82. GridToGrid NBAR-NDVI Rolling Input: VIIRS NBAR-NDVI Monthly Climatology Tiles (GridIP-VIIRS-Nbar-Ndvi-Monthly-Tile)

Input	Type/Size	Description	Units (where applicable) / Valid Range
Tilel-Level Data Items			
scale	Float32	Scale Factor for NDVI	Minfloat - Maxfloat

Input	Type/Size	Description	Units (where applicable) / Valid Range
offset	Float32	Offset for NDVI	Minfloat - Maxfloat
Cell-Level Data Items			
ndvi	UInt16 * numLandCells	Normalized Difference Vegetation Index value for this grid cell	Scaled unitless ; 0 - 65527 Unscaled (-1.0) - (+1.0)

Table 83. GridToGrid NBAR-NDVI Rolling Input: VIIRS NBAR-NDVI Rolling Tiles (GridIP-VIIRS-Nbar-Ndvi-Rolling-Tile)

Input	Type/Size	Description	Units (where applicable) / Valid Range
Tile-Level Data Items			
timestamps	Int64 * 3	Timestamp	IET; Minint - Maxint
scale	Float32	Scale Factor for NDVI	Minfloat - Maxfloat
offset	Float32	Offset for NDVI	Minfloat - Maxfloat
Cell-Level Data Items			
ndvi	UInt16 * numLandCells	Normalized Difference Vegetation Index value for this grid cell	Scaled unitless ; 0 - 65527 Unscaled (-1.0) - (+1.0)
timestampIndex	UInt8 * numLandCells	0 = most recent 17 Day NBAR-NDVI value 1 = second most recent 17 Day NBAR-NDVI value 2 = monthly climatology NBAR-NDVI value	0 - 2

2.9.1.1.5 GridToGrid Monthly Inputs

Tables 84 and 85 show the GridToGrid Monthly inputs.

Table 84. GridToGrid NBAR-NDVI Monthly Input: VIIRS NBAR-NDVI 17 Day Tiles (GridIP-VIIRS-Nbar-Ndvi-17Day-Tile)

Input	Type/Size	Description	Units (where applicable) / Valid Range
Tilel-Level Data Items			
scale	Float32	Scale Factor for NDVI	Minfloat - Maxfloat
offset	Float32	Offset for NDVI	Minfloat - Maxfloat
Cell-Level Data Items			
ndvi	UInt16 * numLandCells	Normalized Difference Vegetation Index value for this grid cell	Scaled unitless ; 0 - 65527 Unscaled (-1.0) - (+1.0)

Table 85. GridToGrid NBAR-NDVI Monthly Input: VIIRS NBAR-NDVI Monthly Climatology Tiles (GridIP-VIIRS-Nbar-Ndvi-Monthly-Tile)

Input	Type/Size	Description	Units (where applicable) / Valid Range
Tilel-Level Data Items			
scale	Float32	Scale Factor for NDVI	Minfloat - Maxfloat
offset	Float32	Offset for NDVI	Minfloat - Maxfloat
Cell-Level Data Items			
ndvi	UInt16 * numLandCells	Normalized Difference Vegetation Index value for this grid cell	Scaled unitless ; 0 - 65527 Unscaled (-1.0) - (+1.0)

2.9.1.2 Outputs

2.9.1.2.1 GridToGran Outputs

Table 86 shows the GridToGran outputs.

Table 86. GridToGran NBAR-NDVI Output: Granulated VIIRS NBAR-NDVI (VIIRS-GridIP-VIIRS-Nbar-Ndvi-Mod-Gran)

Input	Type/Size	Description	Units (where applicable) / Valid Range
Pixel-Level Data Items			
ndvi	Float32 * 768 * 3200	Normalized Difference Vegetation Index value for this pixel	(-1.0) - (+1.0)

2.9.1.2.2 GridToGrid 17 Day Outputs

Table 87 shows the GridToGrid 17 Day outputs.

Table 87. GridToGrid NBAR-NDVI 17 Day Output: VIIRS NBAR-NDVI 17 Day Tiles (GridIP-VIIRS-Nbar-Ndvi-17Day-Tile)

Input	Type/Size	Description	Units (where applicable) / Valid Range
Tilel-Level Data Items			
scale	Float32	Scale Factor for NDVI	Minfloat - Maxfloat
offset	Float32	Offset for NDVI	Minfloat - Maxfloat
Cell-Level Data Items			
ndvi	UInt16 * numLandCells	Normalized Difference Vegetation Index value for this grid cell	Scaled unitless ; 0 - 65527 Unscaled (-1.0) - (+1.0)

2.9.1.2.3 GridToGrid Rolling Outputs

Table 88 shows the GridToGrid Rolling outputs.

Table 88. GridToGrid NBAR-NDVI Rolling Output: VIIRS NBAR-NDVI Rolling Tiles (GridIP-VIIRS-Nbar-Ndvi-Rolling-Tile)

Input	Type/Size	Description	Units (where applicable) / Valid Range
Tile-Level Data Items			
timestamps	Int64 * 3	Timestamp	IET; Minint - Maxint
scale	Float32	Scale Factor for NDVI	Minfloat - Maxfloat
offset	Float32	Offset for NDVI	Minfloat - Maxfloat
Cell-Level Data Items			
ndvi	UInt16 * numLandCells	Normalized Difference Vegetation Index value for this grid cell	Scaled unitless ; 0 - 65527 Unscaled (-1.0) - (+1.0)
timestampIndex	UInt8 * numLandCells	0 = most recent 17 Day NBAR-NDVI value 1 = second most recent 17 Day NBAR-NDVI value 2 = monthly climatology NBAR-NDVI value	0 - 2

2.9.1.2.4 GridToGrid Monthly Outputs

Table 89 shows the GridToGrid Monthly outputs.

Table 89. GridToGrid NBAR-NDVI Monthly Output: VIIRS NBAR-NDVI Monthly Climatology Tiles (GridIP-VIIRS-Nbar-Ndvi-Monthly-Tile)

Input	Type/Size	Description	Units (where applicable) / Valid Range
Tilel-Level Data Items			
scale	Float32	Scale Factor for NDVI	Minfloat - Maxfloat
offset	Float32	Offset for NDVI	Minfloat - Maxfloat
Cell-Level Data Items			
ndvi	UInt16 * numLandCells	Normalized Difference Vegetation Index value for this grid cell	Scaled unitless ; 0 - 65527 Unscaled (-1.0) - (+1.0)

2.9.2 Algorithm Processing

2.9.2.1 GridToGran

The GridToGran NBAR-NDVI algorithm granulates the ‘nbarNdvi’ field using the Greatest Weight Neighbor method at moderate resolution.

2.9.2.2 GridToGrid

There are three parts to the GridToGrid NBAR-NDVI algorithms, as shown in Figure 16. The 17 Day NBAR-NDVI algorithm calculates the NBAR-NDVI for 5km grid cells using the LSA and BRDF Arch GIPs (1km grid cells). The vegetation layer is chosen based on the most recent update date from the BRDF Arch GIP. The NBAR is read from the corresponding vegetation layer in the LSA GIP if quality is good (full inversion and ‘good’ quality). The NBAR-NDVI is then computed using bands M5 and M7 for each of the ‘good’ quality NBAR values. This algorithm creates one new tile in DMS and retains the two most recent of its input NBAR-NDVI tiles, deleting anything older.

The Monthly Climatology NBAR-NDVI algorithm uses two or three 17 Day NBAR-NDVI GIPs (as many as needed to cover the entire month) and calculates the average NBAR-NDVI for the period, taking into account the number of days to which each 17 Day GIP contributed. If 17 Day NBAR-NDVI values are FILL, the output retains the value from the same month of the previous year. Once this algorithm creates a new output tile, it deletes the previous year of the same month’s tile from DMS.

The Rolling NBAR-NDVI algorithm uses the most recent 17 Day NBAR-NDVI GIP if it is not FILL. If it is FILL, the algorithm then attempts to use the second most recent 17 Day NBAR-NDVI GIP. If that is also FILL, the algorithm then uses the Monthly Climatology NBAR-NDVI GIP (it is never FILL). The month used is the most applicable month (for the next 17 Day period). This algorithm deletes the old Rolling Tile from DMS after it copies and updates the tile for the new period.

2.9.3 Graceful Degradation

2.9.3.1 Graceful Degradation Inputs

There is one case where input graceful degradation is indicated in the GridToGran.

1. An input retrieved for the algorithm had its N_Graceful_Degradation metadata field set to YES (propagation).

2.9.3.2 Graceful Degradation Processing

None.

2.9.3.3 Graceful Degradation Outputs

None.

2.9.4 Exception Handling

This GIP algorithm inherits the Processing (PRO) Common error handling strategy of removing output products when an error path is encountered. This error condition is handled at the level encountered and then the failure condition is forwarded to the calling program. A controller algorithm then removes any output products that it has, and the error condition continues to propagate up in the case of nested controllers.

2.9.5 Data Quality Monitoring

None.

2.9.6 Computational Precision Requirements

None.

2.9.7 Algorithm Support Considerations

None.

2.9.8 Assumptions and Limitations

None.

3.0 GLOSSARY/ACRONYM LIST

3.1 Glossary

Table 90 contains terms most applicable for this OAD.

Table 90. Glossary

Term	Description
Algorithm	A formula or set of steps for solving a particular problem. Algorithms can be expressed in any language, from natural languages like English to mathematical expressions to programming languages like FORTRAN. On NPOESS, an algorithm consists of: 1. A theoretical description (i.e., science/mathematical basis) 2. A computer implementation description (i.e., method of solution) 3. A computer implementation (i.e., code)
Algorithm Configuration Control Board (ACCB)	Interdisciplinary team of scientific and engineering personnel responsible for the approval and disposition of algorithm acceptance, verification, development and testing transitions. Chaired by the Algorithm Implementation Process Lead, members include representatives from IWPTB, Systems Engineering & Integration IPT, System Test IPT, and IDPS IPT.
Algorithm Verification	Science-grade software delivered by an algorithm provider is verified for compliance with data quality and timeliness requirements by Algorithm Team science personnel. This activity is nominally performed at the IWPTB facility. Delivered code is executed on compatible IWPTB computing platforms. Minor hosting modifications may be made to allow code execution. Optionally, verification may be performed at the Algorithm Provider's facility if warranted due to technical, schedule or cost considerations.
Ancillary Data	Any data which is not produced by the NPOESS System, but which is acquired from external providers and used by the NPOESS system in the production of NPOESS data products.
Auxiliary Data	Auxiliary Data is defined as data, other than data included in the sensor application packets, which is produced internally by the NPOESS system, and used to produce the NPOESS deliverable data products.
Collecting	Collecting is simply inserting new data values into the GIP without affecting the current values. In some cases, the number of data values in the collection is capped to limit resource usage. An example is the Daily Surface Reflectance GIP, which collects a certain number of observations per grid cell depending on the latitude zone of the tile (Max of 2 at Equator and 15 at Poles). Once the maximum number of observations has been collected, any additional observations during that period are discarded.
Compositing	Combining gridded data through data selection, weighting, interpolation, and/or averaging to create a single value per global grid cell that is representative of the retrieval at that location during a specific time period. An example is CV-MVC, which is used during GranToGrid on the Monthly SR/BT/VI GIP. Another example is Best Choice, which continually chooses the best value for the grid cell between current and newly-received.
EDR Algorithm	Scientific description and corresponding software and test data necessary to produce one or more environmental data records. The scientific computational basis for the production of each data record is described in an ATBD. At a minimum, implemented software is science-grade and includes test data demonstrating data quality compliance.
Environmental Data Record (EDR)	*[IORD Definition]* Data record produced when an algorithm is used to convert Raw Data Records (RDRs) to geophysical parameters (including ancillary parameters, e.g., cloud clear radiation, etc.). *[Supplementary Definition]* An Environmental Data Record (EDR) represents the state of the environment, and the related information needed to access and understand the record. Specifically, it is a set of related data items that describe one or more related estimated environmental parameters over a limited time-space range. The parameters are located by time and Earth coordinates. EDRs may have been resampled if they are created from multiple data sources with different sampling patterns. An EDR is created from one or more NPOESS SDRs/TDRs or EDRs, plus ancillary environmental data provided by others. EDR metadata contains references to its processing history, spatial and temporal coverage, and quality.

Check the JPSS MIS Server at https://jpssmis.gsfc.nasa.gov/frontmenu_dsp.cfm to verify that this is the correct version prior to use

Term	Description
Granulation	Copying/Converting data from a grid to a granule. This is GridToGran.
Gridding	Updating a Gridded IP with data (either Granule data or other GIP data). This could be GranToGrid or GridToGrid processing.
Land Restricted GIP	GIP containing only Land intersecting tiles (non-land and non-earth tiles removed). Number of tiles ~ 2457.
Model Validation	The process of determining the degree to which a model is an accurate representation of the real-world from the perspective of the intended uses of the model. [Ref.: DoDD 5000.59-DoD Modeling and Simulation Management]
Model Verification	The process of determining that a model implementation accurately represents the developer's conceptual description and specifications. [Ref.: DoDD 5000.59-DoD Modeling and Simulation Management]
Non-Land Restricted GIP	GIP containing only Earth intersecting tiles (non-earth tiles removed). Number of tiles ~ 3436.
Operational Code	Verified science-grade software, delivered by an algorithm provider and verified by IWPTB, is developed into operational-grade code by the IDPS IPT.
Operational-Grade Software	Code that produces data records compliant with the System Specification requirements for data quality and IDPS timeliness and operational infrastructure. The software is modular relative to the IDPS infrastructure and compliant with IDPS application programming interfaces (APIs) as specified for TDR/SDR or EDR code.
Periodic GIP	GIP that is specific to a defined period (i.e. Daily, monthly, etc.)
Raw Data Record (RDR)	*[IORD Definition]* Full resolution digital sensor data, time referenced and earth located, with absolute radiometric and geometric calibration coefficients appended, but not applied, to the data. Aggregates (sums or weighted averages) of detector samples are considered to be full resolution data if the aggregation is normally performed to meet resolution and other requirements. Sensor data shall be unprocessed with the following exceptions: time delay and integration (TDI), detector array non-uniformity correction (i.e., offset and responsivity equalization), and data compression are allowed. Lossy data compression is allowed only if the total measurement error is dominated by error sources other than the data compression algorithm. All calibration data will be retained and communicated to the ground without lossy compression. *[Supplementary Definition]* A Raw Data Record (RDR) is a logical grouping of raw data output by a sensor, and related information needed to process the record into an SDR or TDR. Specifically, it is a set of unmodified raw data (mission and housekeeping) produced by a sensor suite, one sensor, or a reasonable subset of a sensor (e.g., channel or channel group), over a specified, limited time range. Along with the sensor data, the RDR includes auxiliary data from other portions of NPOESS (space or ground) needed to recreate the sensor measurement, to correct the measurement for known distortions, and to locate the measurement in time and space, through subsequent processing. Metadata is associated with the sensor and auxiliary data to permit its effective use.
Regridding	See 'Granulation' in this glossary.
Retrieval Algorithm	A science-based algorithm used to 'retrieve' a set of environmental/geophysical parameters (EDR) from calibrated and geolocated sensor data (SDR). Synonym for EDR processing.
Rolling Update GIP	GIP that is continuously updated with NPOESS Data Product granules. There is no specific period for a Rolling Update GIP – it is maintained forever.
Science Algorithm	The theoretical description and a corresponding software implementation needed to produce an NPP/NPOESS data product (TDR, SDR or EDR). The former is described in an ATBD. The latter is typically developed for a research setting and characterized as "science-grade".
Science Algorithm Provider	Organization responsible for development and/or delivery of TDR/SDR or EDR algorithms associated with a given sensor.
Science-Grade Software	Code that produces data records in accordance with the science algorithm data quality requirements. This code, typically, has no software requirements for implementation language, targeted operating system, modularity, input and output data format or any other design discipline or assumed infrastructure.

Term	Description
SDR/TDR Algorithm	Scientific description and corresponding software and test data necessary to produce a Temperature Data Record and/or Sensor Data Record given a sensor's Raw Data Record. The scientific computational basis for the production of each data record is described in an Algorithm Theoretical Basis Document (ATBD). At a minimum, implemented software is science-grade and includes test data demonstrating data quality compliance.
Seed File	Seed files are defined as static mission support data. These files are provided by the GISF as part of a SW drop and ingested by ING.
Seeding	Ingesting a seed file into the DPE that is used as the initial version of a Gridded IP.
Sensor Data Record (SDR)	*[IORD Definition]* Data record produced when an algorithm is used to convert Raw Data Records (RDRs) to calibrated brightness temperatures with associated ephemeris data. The existence of the SDRs provides reversible data tracking back from the EDRs to the Raw data. *[Supplementary Definition]* A Sensor Data Record (SDR) is the recreated input to a sensor, and the related information needed to access and understand the record. Specifically, it is a set of incident flux estimates made by a sensor, over a limited time interval, with annotations that permit its effective use. The environmental flux estimates at the sensor aperture are corrected for sensor effects. The estimates are reported in physically meaningful units, usually in terms of an angular or spatial and temporal distribution at the sensor location, as a function of spectrum, polarization, or delay, and always at full resolution. When meaningful, the flux is also associated with the point on the Earth geoid from which it apparently originated. Also, when meaningful, the sensor flux is converted to an equivalent top-of-atmosphere (TOA) brightness. The associated metadata includes a record of the processing and sources from which the SDR was created, and other information needed to understand the data.
Snapshots	Snapshots are simply making a copy of all the values of a GIP and inserting them into a new GIP, with different Metadata values. This is a GridToGrid process when done by PRO. Snapshots can be created by DDS via DMS query and export utilities. The default behavior is that DDS will generate daily snapshots (if needed) for the Snow Ice Cover.
Temperature Data Record (TDR)	*[IORD Definition]* Temperature Data Records (TDRs) are geolocated, antenna temperatures with all relevant calibration data counts and ephemeris data to revert from T-sub-a into counts. *[Supplementary Definition]* A Temperature Data Record (TDR) is the brightness temperature value measured by a microwave sensor, and the related information needed to access and understand the record. Specifically, it is a set of the corrected radiometric measurements made by an imaging microwave sensor, over a limited time range, with annotation that permits its effective use. A TDR is a partially-processed variant of an SDR. Instead of reporting the estimated microwave flux from a specified direction, it reports the observed antenna brightness temperature in that direction.

3.2 Acronyms

Table 89 contains acronyms most applicable for this OAD.

Table 91. Acronyms

Term	Expansion
AM&S	Algorithms, Models & Simulations
API	Application Programming Interfaces
ARP	Application Related Product
AW	Area Weight
BLOBs	Binary Large OBjects
CDFCB-X	Common Data Format Control Book - External
DMS	Data Management Subsystem
DPIS ICD	Data Processor Inter-subsystem Interface Control Document
DQTT	Data Quality Test Table
DSR	Daily Surface Reflectance
GIP	Gridded Intermediate Product (Gridded IP)
GWN	Greatest Weight Neighbor
IET	IDPS Epoch Time
IIS	Intelligence and Information Systems
INF	Infrastructure
ING	Ingest
IP	Intermediate Product
ISF	Internal Support Functions
LSA	Land Surface Albedo
LUT	Look-Up Table
MDFCB	Mission Data Format Control Book
MLI	Master Land Index
NN	Nearest Neighbor
PRO	Processing
QF	Quality Flag
SDR	Sensor Data Records
SI	Software Item or International System of Units
SIC	Snow Ice Cover
TBD	To Be Determined
TBR	To Be Resolved
TOA	Top of the Atmosphere
VCM	VIIRS Cloud Mask
WFM	WorkFlow Manager

4.0 OPEN ISSUES

Table 92. TBXs

TBX ID	Title/Description	Resolution Date
None		